INDIKATOREN

Logisk afkodning.

Man benytter sig af en "loddeklads-adder", da man skifter fra lav til høj repræsentation af logisk "1".
Da der således er 2 forskellige outputs pr plade, men fra samme ben, benævnes benene med Ø og N (øvre og nedre)

Bedingelse for "1" på linie 40'

233 (C1-22) pin 24 Ø = $(\overline{K} + \overline{B_3} \cdot \overline{K_A} + B_3 \cdot K_A + \overline{OR_{38}}) \cdot \equiv$ "1"
-"- (-"-) pin 24 N = $(\overline{W} + \overline{B_3} \cdot \overline{O_A} + B_3 \cdot O_A + \overline{OR_{38}}) \cdot \equiv$ "1"
233 (C1-23) pin 24 Ø = $(\overline{R} + \overline{B_3} \cdot \overline{R_A} + B_3 \cdot R_A + \overline{OR_{38}}) \cdot \equiv$ "1"
-"- (-"-) pin 24 N = $(\overline{N} + \overline{B_3} \cdot \overline{H_{40}} + B_3 \cdot H_{40} + \overline{OR_{38}}) \cdot \equiv$ "1"
233 (C1-24) pin 24 Ø = $(\overline{P} + \overline{B_3} \cdot \overline{P_A} + B_3 \cdot P_A + \overline{OR_{38}}) \cdot \equiv$ "1"
-"- (-"-) pin 24 N = $(\overline{Q} + \overline{B_3} \cdot \overline{Q_A} + B_3 \cdot Q_A + \overline{OR_{38}}) \cdot \equiv$ "1"
233 (C1-25) pin 24 Ø = $(\overline{O} + \overline{B_3} \cdot \overline{O_A} + B_3 \cdot O_A + \overline{OR_{38}}) \cdot \equiv$ "1"
-"- (-"-) pin 24 N = $(\overline{T} + \overline{B_3} \cdot \overline{T_A} + B_3 \cdot T_A + \overline{OR_{38}}) \equiv$ "1"

Bedingelse for "1" på linie 41'

233 (C1-22) pin 21 Ø = $(\overline{K} + \overline{B_3} \cdot \overline{K_B} + B_3 \cdot K_B + \overline{OR_{39}}) \cdot \equiv$ "1"
-"- (-"-) pin 21 N = $(\overline{W} + \overline{B_3} \cdot \overline{O_B} + B_3 \cdot O_B + \overline{OR_{39}}) \cdot \equiv$ "1"
233 (C1-23) pin 21 Ø = $(\overline{R} + \overline{B_3} \cdot \overline{R_B} + B_3 \cdot R_B + \overline{OR_{39}}) \cdot \equiv$ "1"
-"- (-"-) pin 21 N = $(\overline{N} + \overline{B_3} \cdot \overline{H_{41}} + B_3 \cdot H_{41} + \overline{OR_{39}}) \cdot \equiv$ "1"
233 (C1-24) pin 21 Ø = $(\overline{P} + \overline{B_3} \cdot \overline{P_B} + B_3 \cdot P_B + \overline{OR_{39}}) \cdot \equiv$ "1"
-"- (-"-) pin 21 N = $(\overline{Q} + \overline{B_3} \cdot \overline{Q_B} + B_3 \cdot Q_B + \overline{OR_{39}}) \cdot \equiv$ "1"
233 (C1-25) pin 21 Ø = $(\overline{O} + \overline{B_3} \cdot \overline{O_B} + B_3 \cdot O_B + \overline{OR_{39}}) \cdot \equiv$ "1"
-"- (-"-) pin 21 N = $(\overline{T} + \overline{B_3} \cdot \overline{T_B} + B_3 \cdot T_B + \overline{OR_{39}}) \equiv$ "1"

Betingelse for at få B

For at få B ≡ betingelsen opfyldt, må linie 40' = 41' = "1"
dvs. alle betingelser på foregående side må vare "1"
Envidere må outputtet på plade 233 (C1-21) (den óverste i rokken) vare 1 ⇒

$$233(C1\text{-}21)\ 24\emptyset = (\overline{W} + \overline{B_3} \cdot \overline{w} + B_3 \cdot w + OR_{38} + OR_{39}) \cdot \equiv \text{"1"}$$

$$\text{—"—} \quad \text{—"—} \quad 24N = (\overline{O} + \overline{B_3} \cdot \text{overflow in AC} + B_3 \cdot \overline{\text{overflow in AC}} + OR_{38} + OR_{39}) \cdot \equiv \text{"1"}$$

$$\text{—"—} \quad \text{—"—} \quad 21\emptyset = (\overline{T} + \overline{B_3} \cdot \overline{AC_{00}} + B_3 \cdot AC_{00} + OR_{38} + OR_{39}) \cdot \equiv \text{"1"}$$

$$\text{—"—} \quad \text{—"—} \quad 21N = (OR_{39} + OR_{38} + B_3 + \overline{B_3}) = \text{"1"}$$

Funktionen w stammer fra (AC) = 0, W fra OR-afk.

Betingelse for at få "1" henhv "0" stillet indikator f.f.'s

OA { "1" $(w \cdot W + S \cdot 0) \cdot (B_0 \cdot OR_{38} \cdot G_m I_0)$
OA { "0" $(\overline{w} \cdot W + \overline{S} \cdot 0) \cdot ($ —"— $)$

OB { "1" $(w \cdot W + S \cdot 0) \cdot (B_0 \cdot OR_{39} \cdot G_m I_0)$
OB { "0" $(\overline{w} \cdot W + \overline{S} \cdot 0) \cdot ($ —"— $)$

TA { "1" $H_{00} \cdot T \cdot B_0 \cdot OR_{38} \cdot G_m I_0$
TA { "0" $\overline{H_{00}} \cdot$ —"—

TB { "1" $H_{00} \cdot T \cdot B_0 \cdot OR_{39} \cdot G_m I_0$
TB { "0" $\overline{H_{00}} \cdot$ —"—

FORTS. →

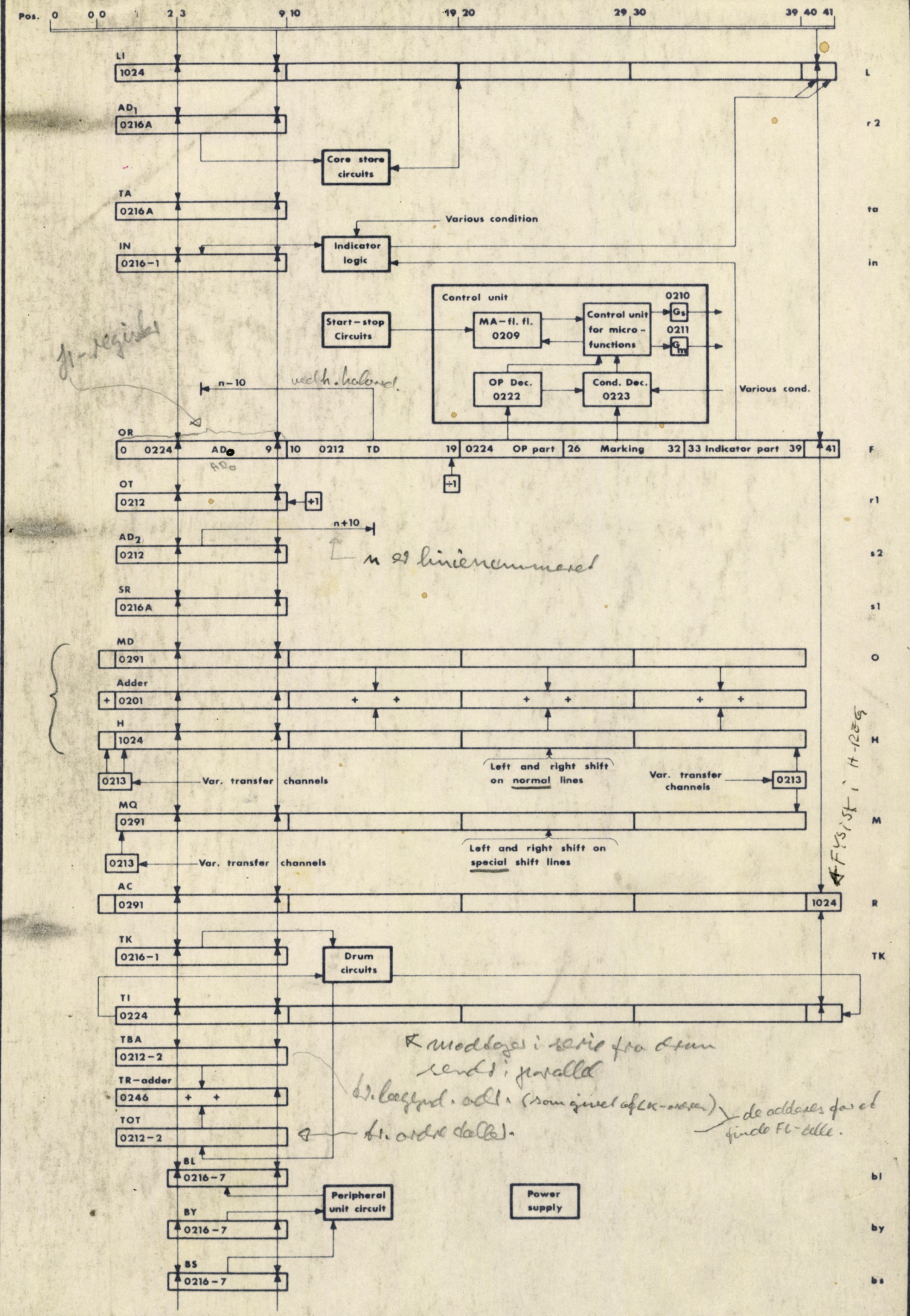

Unit GIER 6	Designed H.I.	REGISTER DISPLAY	Drawing No
REGNE CENTRALEN	Approved		Drawn by G.T. 22.2.66
	Checked 1.2.62		Checked F.E. 26-2-67
	Last Revision		1 Sheets / Sheet 1

PA { "1" $H_{40} \cdot P \cdot B_0 \cdot OR_{38} \cdot GmI_0$; "0" $\overline{H_{40}} \cdot$ ——— " ———

PB { "1" $H_{41} \cdot P \cdot B_0 \cdot OR_{39} \cdot GmI_0$; "0" $\overline{H_{41}} \cdot$ ——— " ———

QA { "1" $H_{40} \cdot Q \cdot B_0 \cdot OR_{38} \cdot GmI_0$; "0" $\overline{H_{40}} \cdot$ ——— " ———

QB { "1" $H_{41} \cdot Q \cdot B_0 \cdot OR_{39} \cdot GmI_0$; "0" $\overline{H_{41}} \cdot$ ——— " ———

RA { "1" $H_{40} \cdot R \cdot B_0 \cdot OR_{38} \cdot GmI_0$; "0" $\overline{H_{40}} \cdot$ ——— " ———

RB { "1" $H_{41} \cdot R \cdot B_0 \cdot OR_{39} \cdot GmI_0$; "0" $\overline{H_{41}} \cdot$ ——— " ———

Teknisk Service 1o-8-1965

Foreløbig equivalentliste for transistorer og dioder til GIER.

OC 47	erstattes af	SFT 228
2N 397		SFT 228
ASZ 12		ASY 6o
TK 25C		ASY 6o
2N 1754		2N 2o48
OC 8o		2N 527
ACZ 1o		ACY 24
OC 615		ASY 24
ASZ 3o		ASY 24
OA 16o		OA 85 - 95
OA 9		HG 5oo2
OA 18o		HG 5oo2
SD 92		BY 1oo
1N 12oo		1N 12o5

WJ

til Rc 3000 diagram
reflekser sorver til
hvad der gælder i Grier

5. Decoding and Current Drivers.

The curcuits for decoding of address and drive are divided into two identical groups, one for the X wires and one for the Y wires. Each group is controlled by 5 bits in the ~~AR~~ register.
AD1 [AR]

Bits ~~0 to 4~~ 3,4,5,8 og 9 control the X wires and bits ~~5 to 9~~ 0.1.2.6 og 7 control the Y wires. In the following only the X wires will be described.

The five bits are divided into two groups, group ~~A~~ B containing 2 bits (AD1 8.9 el 6.7) and group ~~B~~ A containing 3 bits. (AD, 0.1.2 el 3.4.5)

Each group is decoded, group ~~A~~ B having outputs for Read (R~~A~~Bxn) and 4 outputs for write (W~~A~~Bxn). Group ~~B~~ A has 8 outputs for Read (R~~B~~Axn) and 8 outputs for Write (W~~B~~Axn).

Two sets of coordinate decoders 4 x 8 (one for read pulse and one for write pulse) with their outputs coupled in parallel, control the 32 X wires of the core store. ✓

The two bits decoder, giving R~~A~~B and W~~A~~B is located on card RC-1002 and generates base current for 8 drivers.

The three bits decoder giving R~~B~~A and W~~B~~A is located on cards RC-1003 and inhibits the seven base current in the 8 drivers selected by R~~A~~B or W~~A~~B.

The current in the drivers and the matrix wires is controlled by a pulsed high impedance current generator. ✓

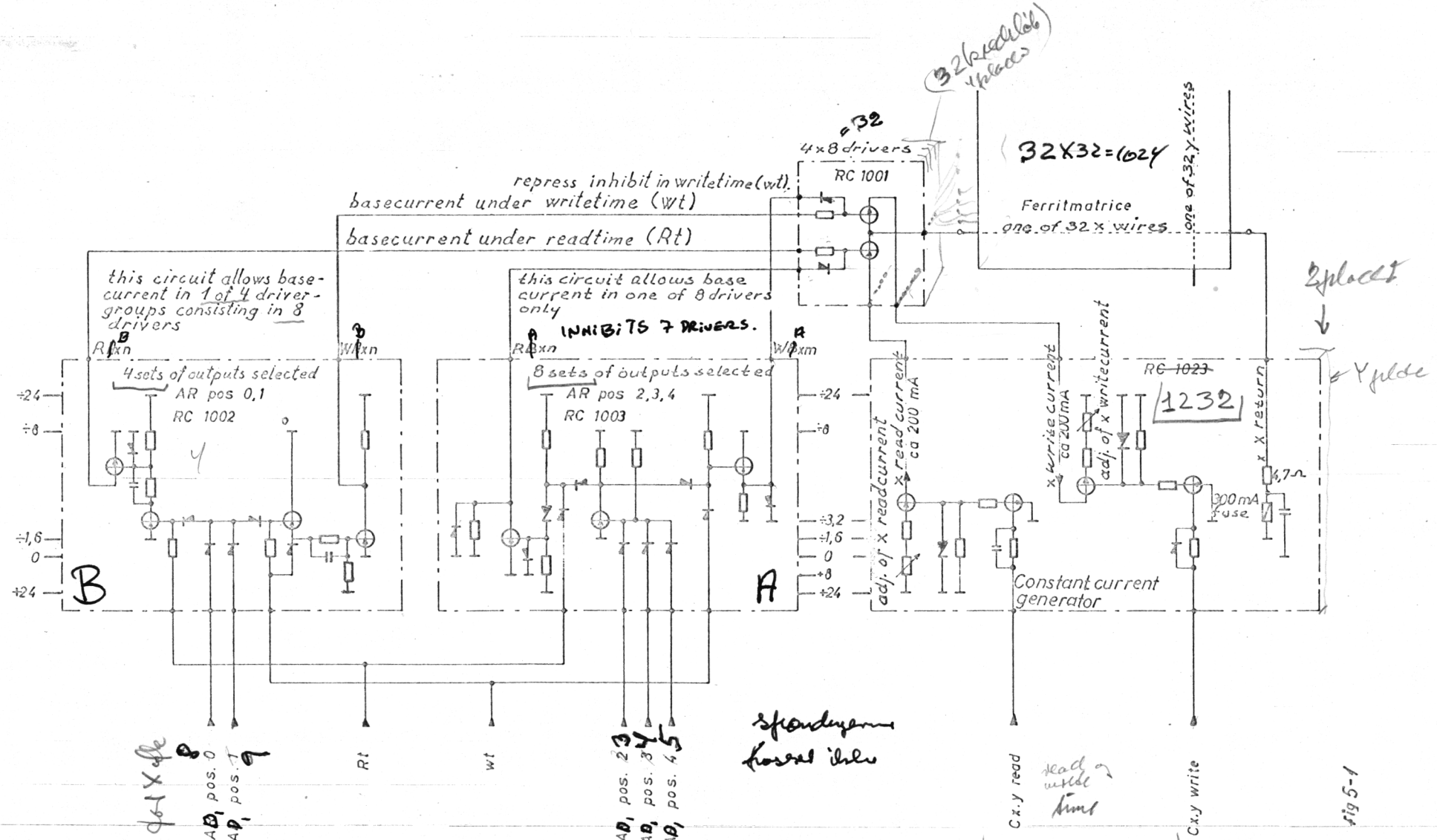

fig 5-1

AD1 ~ 32

RC 3000 men system ens med GIER.

ENDRING så det passer til GIER.

A → B ←

The current is nominally 200 mA adjustable $\pm$ 10%.

The controling of one X- wire is shown in a principal diagram in fig. 5-1.

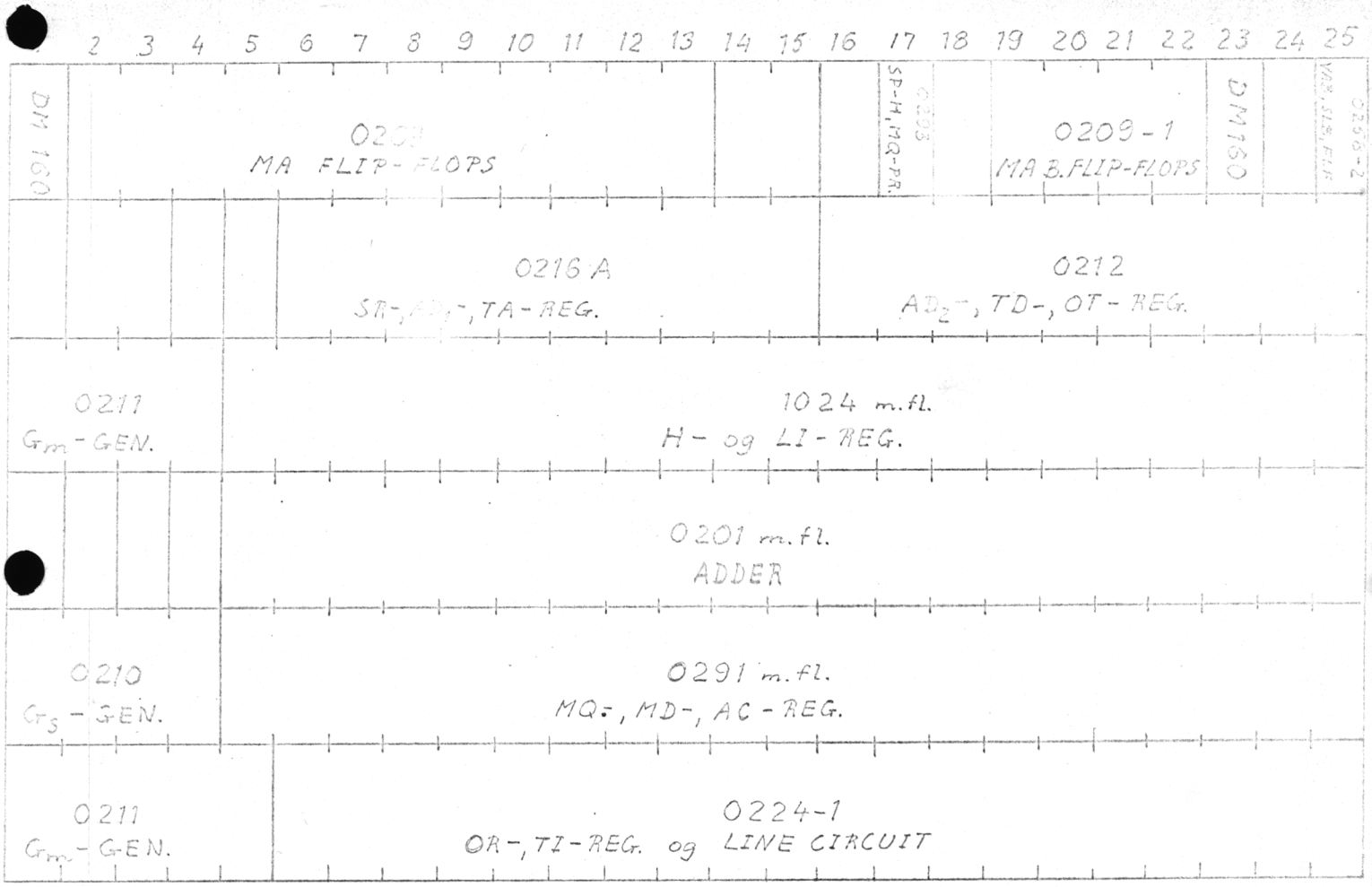

Binær pos. 00 0 1 2 3 4 5 6 7 8 9 10 11 12 13 14 15 16 17 18 19

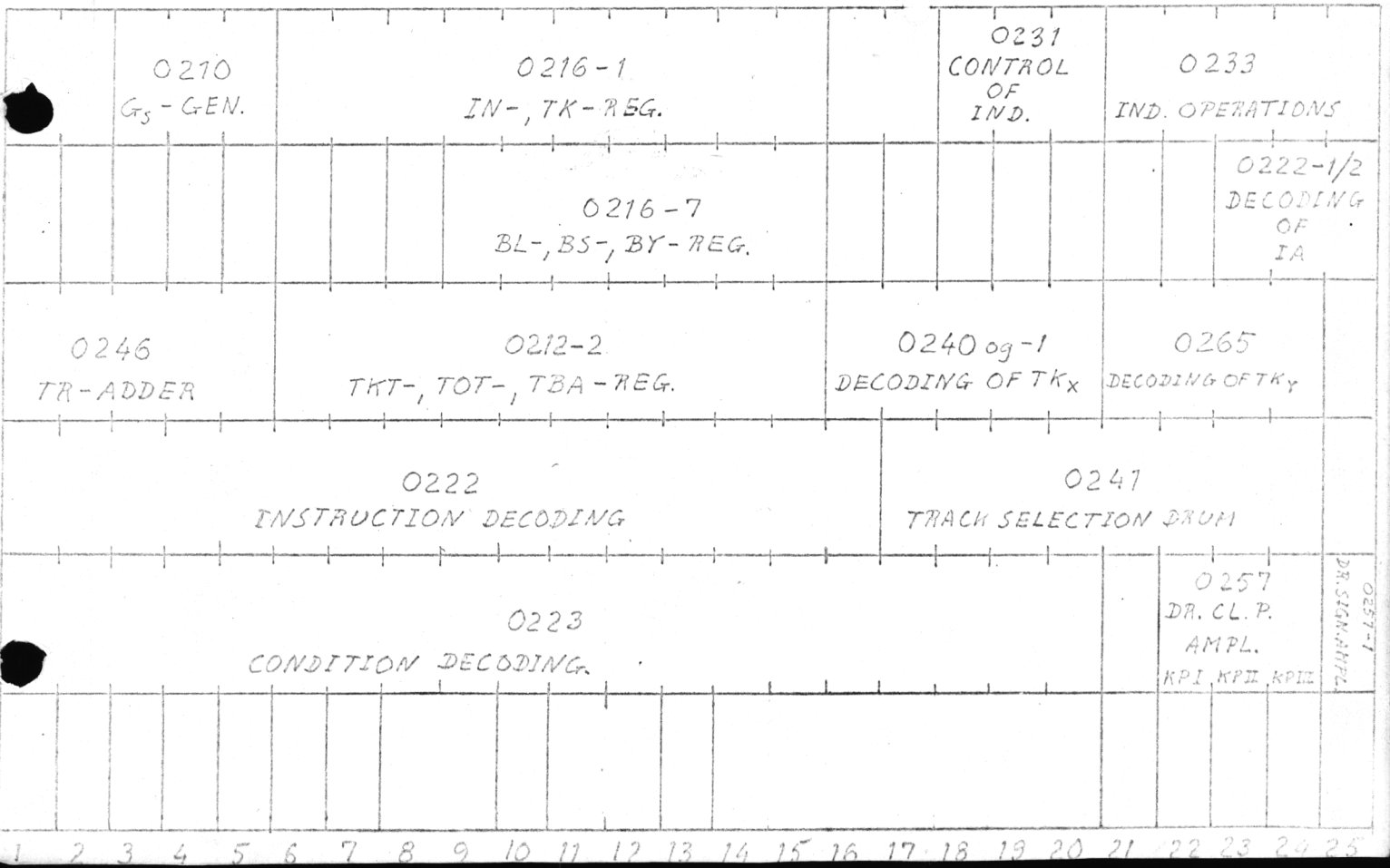

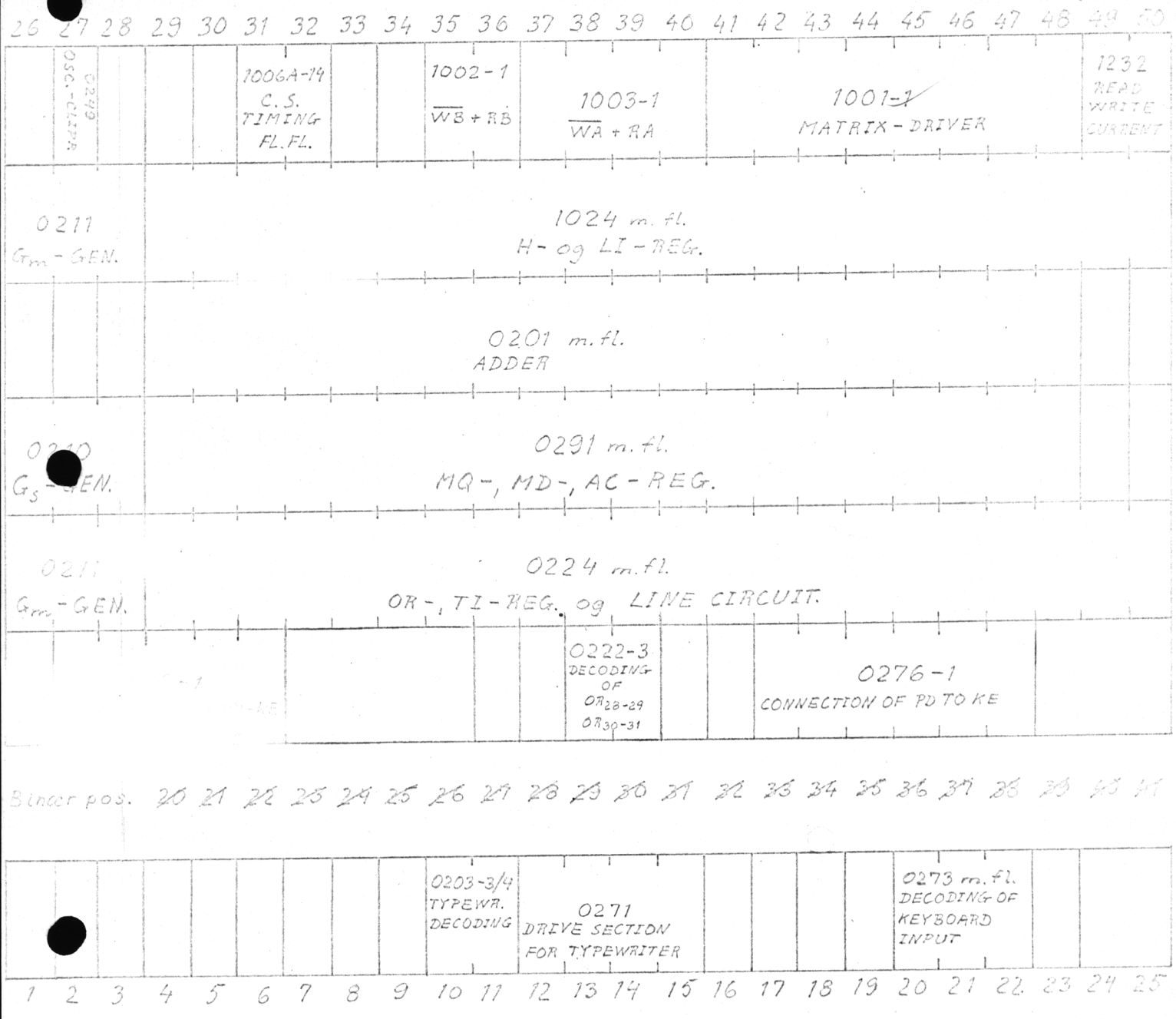
26 27 28 29 30 31 32 33 34 35 36 37 38 39 40 41 42 43 44 45 46 47 48 49 50
0249 OSC.-CIRC.
1006A-14 C.S. TIMING FL.FL.
1002-1 WB + RB
1003-1 WA + RA
1001-1 MATRIX-DRIVER
1232 READ WRITE CURRENT
B1
0211 Gm - GEN.
1024 m. fl. H- og LI-REG.
B2
0201 m. fl. ADDER
B3
0210 Gs - GEN.
0291 m. fl. MQ-, MD-, AC-REG.
B4
0211 Gm - GEN.
0224 m. fl. OR-, TI-REG. og LINE CIRCUIT.
B5
0222-3 DECODING OF OR28-29 OR30-31
0276-1 CONNECTION OF PD TO KE
Binær pos. 20 21 22 23 24 25 26 27 28 29 30 31 32 33 34 35 36 37 38 39 40 41
0203-3/4 TYPEWR. DECODING
0271 DRIVE SECTION FOR TYPEWRITER
0273 m. fl. DECODING OF KEYBOARD INPUT
D1
1 2 3 4 5 6 7 8 9 10 11 12 13 14 15 16 17 18 19 20 21 22 23 24 25
0284 REG. +3,5V +1,5V
0284-1 REG. -13,5V +4,5V REG.
0283 +10,5V REG. -2,5V REG.
0286 +24V REG. -45V REG.
0287 ALARM CIRC. -3,0V REG.
0285 DELAY CIRC. -1,5V REG.
0288 TEMP. CONT.
E2
1 2 3 4 5 6 7

Rialto, 31st March, 1967
FJ/KD

Adjustment of Core Store Strobe

RC 3000 [GIER]

The measuring is made in one pos. in IR [LI] reg. card 1004 [1024] to which "1" is read continously from the core store.

Use probe with ground connected on pin 15 [serial IV + V pin 1N, serial VI pin 15]

Trig: Rt A4-7 (1037) [serial IV+V: Rt2 B1-31-~~5~~ 6, serial VI B1-31-30 (1006A-14)]
Ext. neg.

Time: 0,2 uS

Chopped

A: 0,5V/cm

B: 2 V/cm

C: 2 V/cm

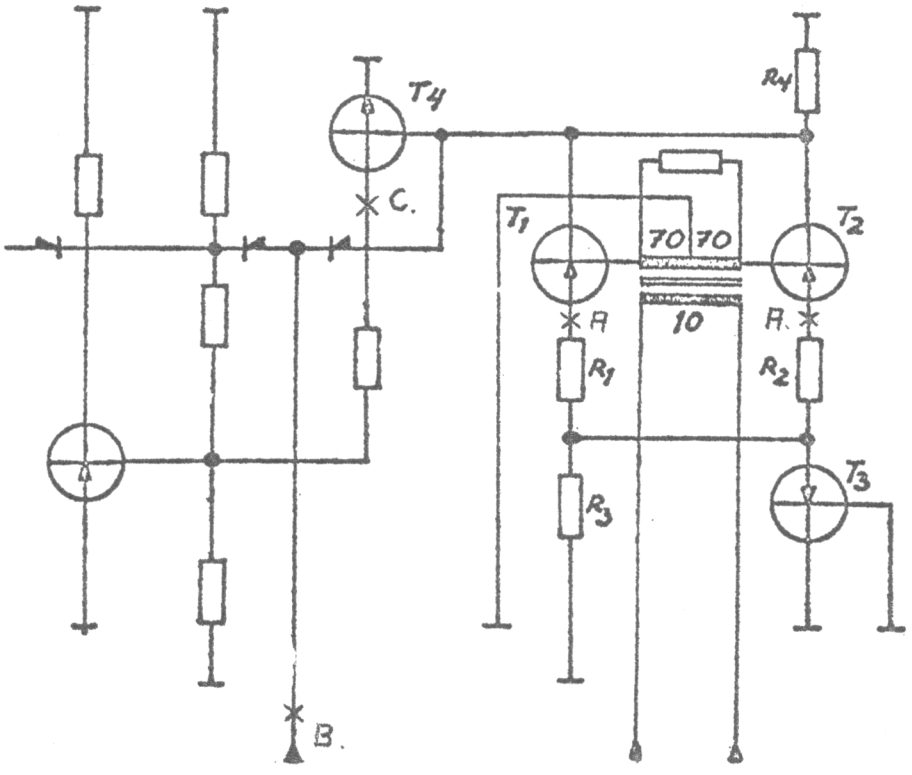

Strobe Read Wire

Fig. 1.

Fig. 2 shows the signals obtained in point A-B-C, on Fig. 1.

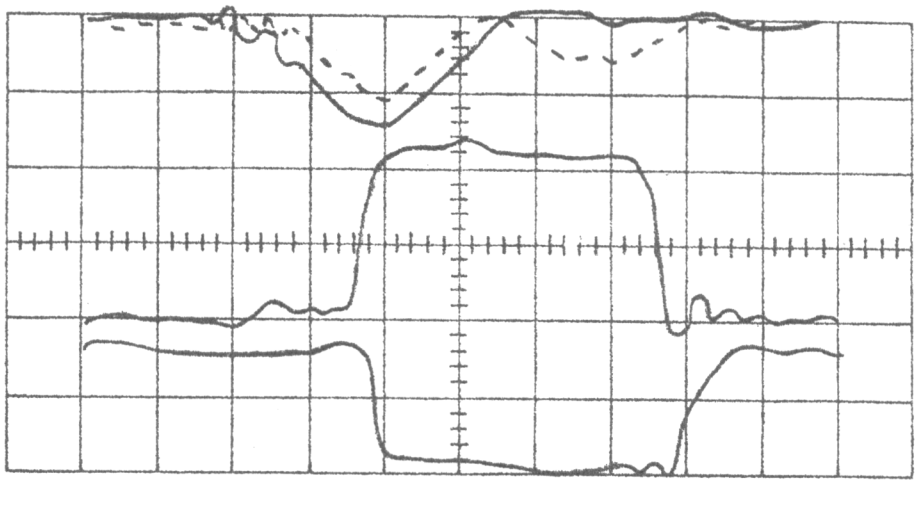

Fig. 2.

If OC [OT] is blocked, only one of the two read-signals (A) will be present.

If it is the dotted signal, then change to the other point A.

Adjust the leading edge of the strobe (B) to be in the middle of the read pulse (A) as shown on fig. 2.

Check that the trailing edge of the strobe (B) is coming before the trailing edge of (C). If not, the strobe is too long and adjustment is necessary.

The strobe must be approximately 0,75 uS [1 uS] long.

VOLTAGE

All voltages are adjusted with potentiometers on the control panel, to 100%, and should be measured for voltage drops accross the relay contacts. Marginal voltages should be at least ± 7%.

delayed 31.5 males ved A1 (bag pro).

THERMAL CUTOUT

Thermal cutout should take place between 33 and 37°, and adjusted with the three potentiometers on card 288 (E7).

(P2)
Gl. gjer

DELAYED 31.5V

MÅLES PA STANDER BAG
PA A1 SKUFFEN

ADJUSTMENTS FOR GIER

TESTPOINTS
(GIEMENS

1 KLIPPER OUT
2 TOOM
3 KPA
4 KPC
5 INTERN FORB.
6 KPB [9m]

CLOCKPULSE

0249 (B1-27)

The oscillator frequency is adjusted by changing the capitance (680 pF)

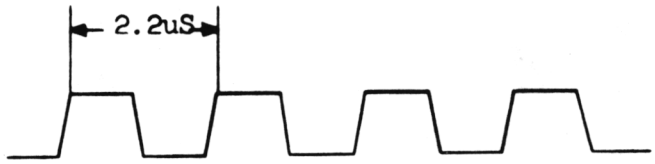

Cfr fin 1N

The clock pulse length can be adjusted by the potentiometer on card o249 and should be 1µS when measuring GM-H$_{0-9}$ as it passes 0 V.

B1-27

A3-9-9 A3-10-7m

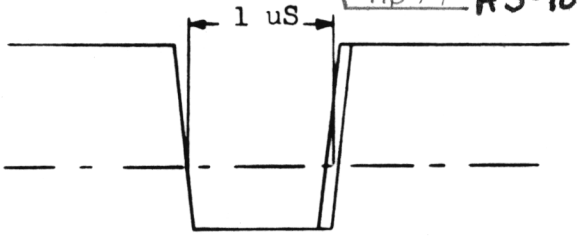

Marginal pulse length is 0,9uS to 1,1uS. (± 10%)

A3-10-10m

SP-

SP-H and MQ

SP-H should start at the same time as GM-H and should lag behind 0.2-0.3µS.

Adjustment is made on 0293 (A1-17) by changing the capacitance.

~~[illegible]~~

forhand ander fra 1NF
Baghand ander fra 680pF.

GM-H 7m

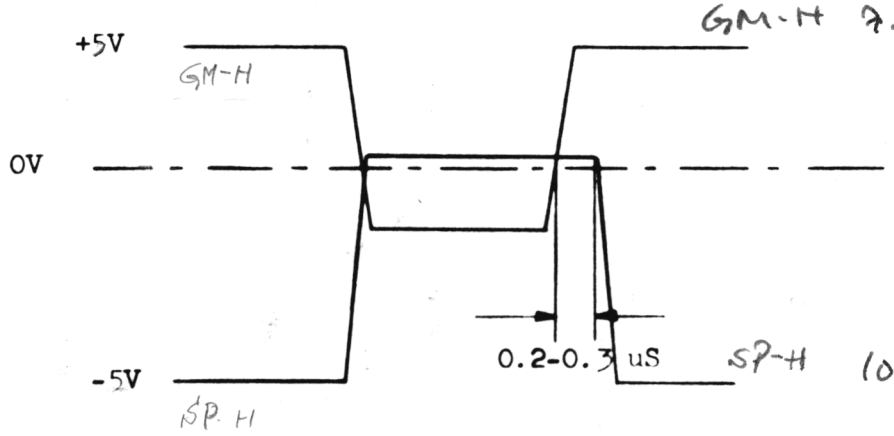

SP-H 10m — for nogle mask

NORDITA
TOPSØE = 14N
se wiring list.

VAB: 0258 (A1 - 25)

The shift from KP_A to KP_B should take place on the trailing edge of a clock pulse. FLF can be adjusted on the potentiometer on A1-25, and should return to zero in the middle of a clock pulse after approx 6.2uS i.e. in the third clock pulse after start.

Pin 31 ~5

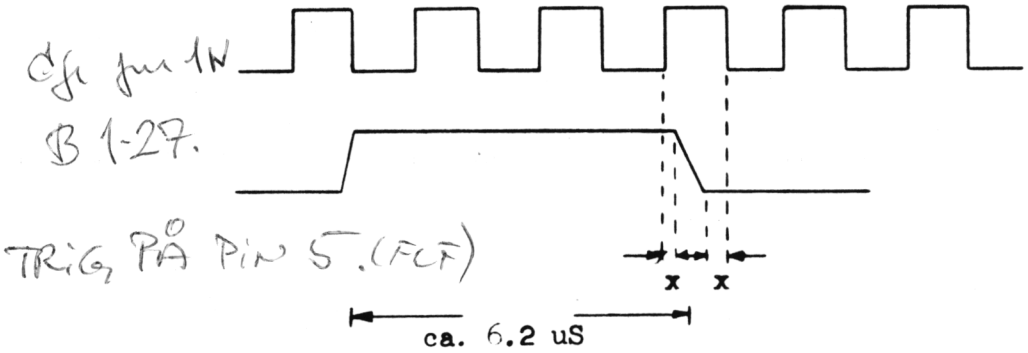

DRUM d5

KP I, II and III amplifiers should be adjusted so that triggering takes place between 66% and 75% of the pulse amplitude. Adjustment is made with the potentiometer on 0257. (d5 - 22-24.

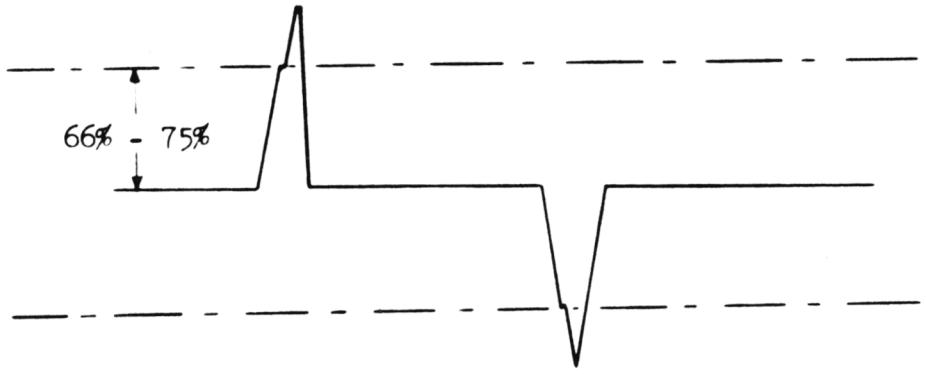

Signal amplifier is adjusted with the potentiometer on 0257-1. During drumtest (all tracks involved) the potentiometer at first is slowly turned clockwise until an error appears, then counter-clocl wise until an error again appears. The potentiometer is now set in the middle of these two extremes. (der skal nore ca 10 [illegible] mellem

punch feed

FORWARD/BRAKE COILS:

Current in these coils is adjusted to 3 amp. with help of the variable resistor 4.7 60W, mounted under the console.

Sen skal vormesen.

AD_1

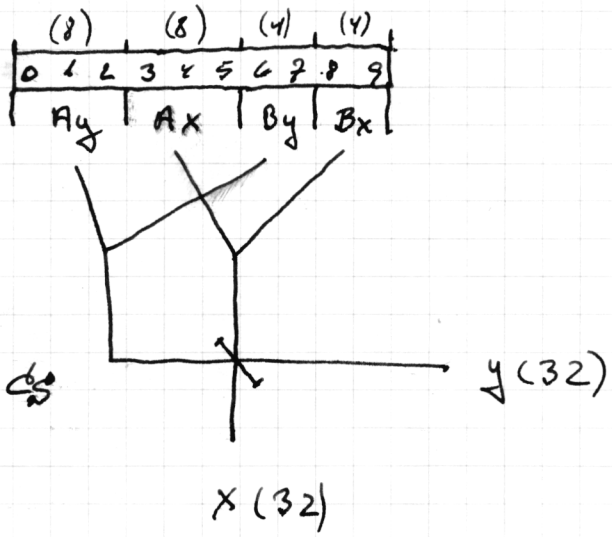

$32^2 = 1024$

A gruppen 1 ud af 4

B gruppen 1 ud af 8 (af de 4)

4

32.32
·64
960
1024

A/s REGNECENTRALEN	Emne: GENERAL	Opg. nr.:	14/6 1968	Sign.	Side
					1/3

KP ~ 480 kc

{ KPA sMA
{ KPAO ∂MA

{ KPB sMAB
{ KPBO sMAB

Gs ~ +1.5 / −3

Gm ~ +4.5 / −1.5 (ej til 6)

LINIERNE:

"0" ~ ÷1.5 V "1" ~ +1.5 V

Hver register position kan sende til linie n samt n−1 g n+1

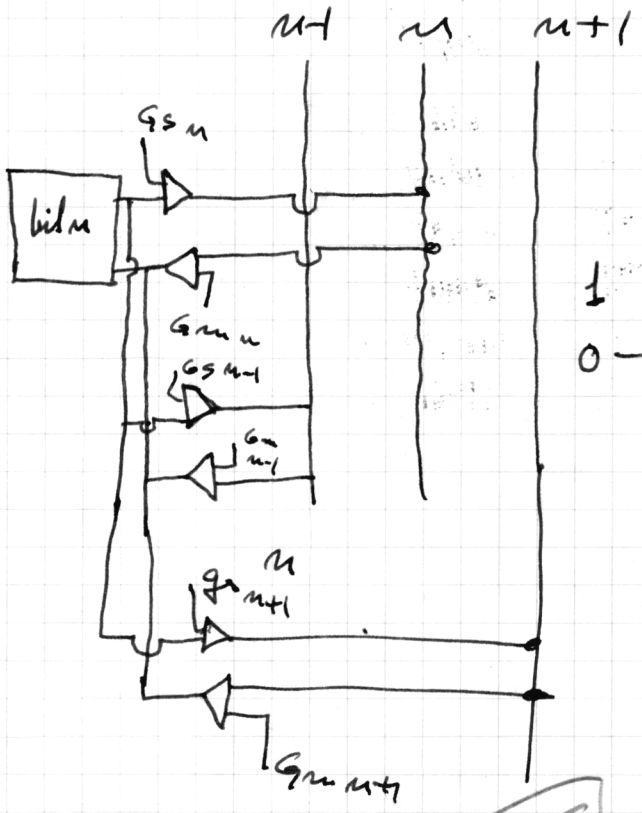

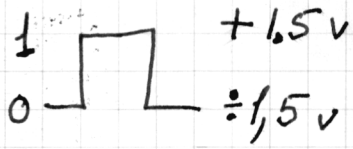

TD sende n−10

AD2 sende n+10

AD1 d.s. adr.

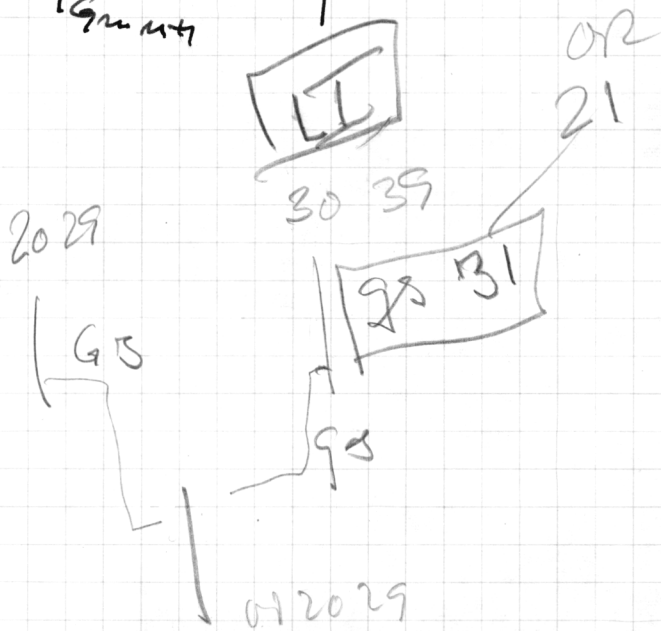

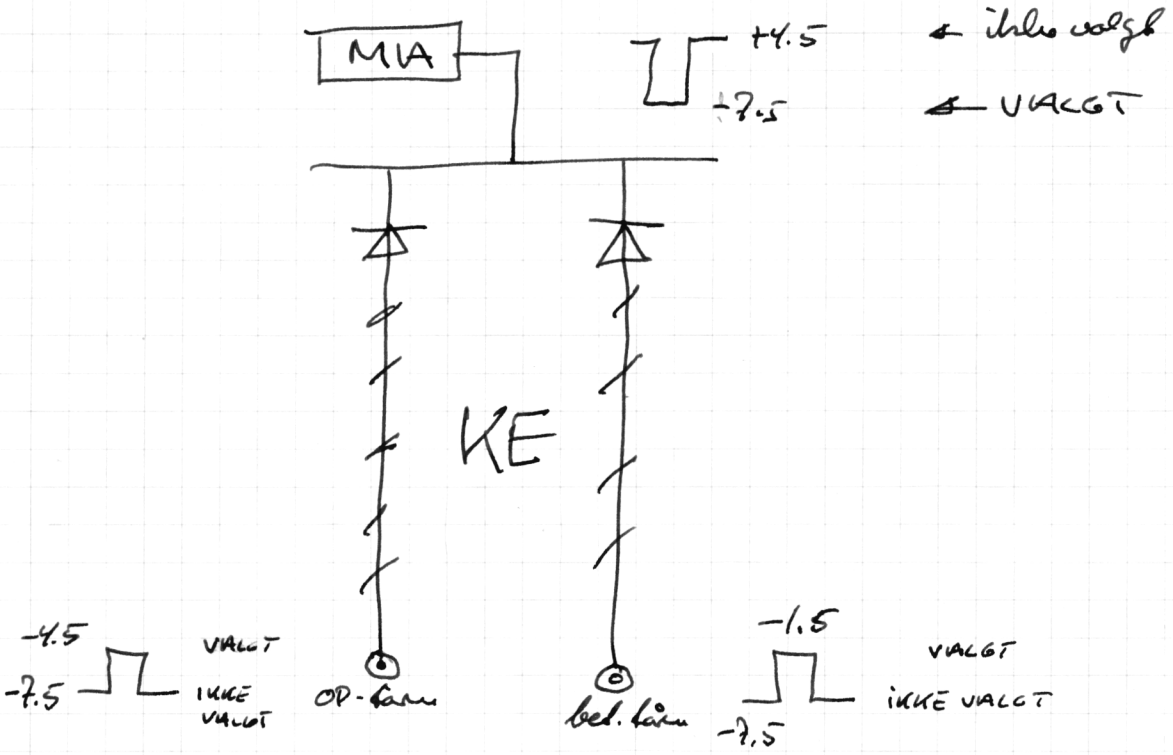

Der gå strøm i den med det mest positive tårn dvs. hvis en op. en bel. vil bel. dermed vælges.

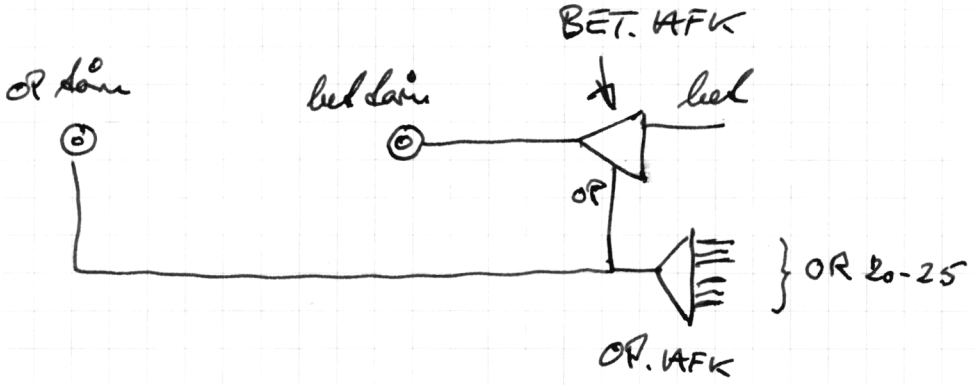

A/s REGNECENTRALEN	Emne: GENERAL	Opg. nr.:	14/6. 1968	Sign. ug	Side 3/3

Mode 5

1. lagre dellerne 0-39 på kanal 38
2. læse kanal 0 til 0-39
3. udfører kanal 0.

A/s REGNECENTRALEN	Emne: "DISPLAY"	Opg. nr.:	/ 19	Sign.	Side

1620 - mil - 1972

525 = bolig

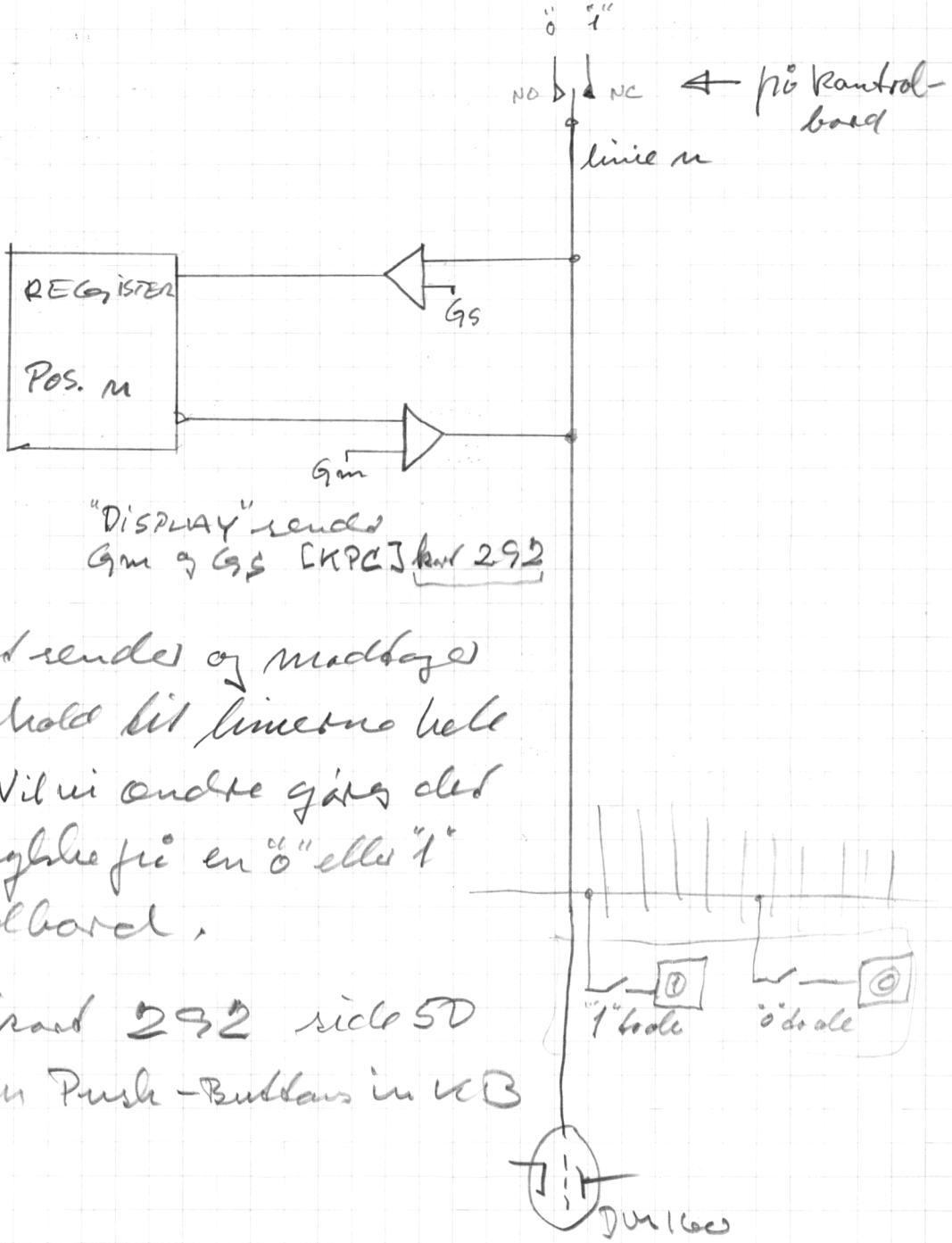

registret sender og modtager sid indhold til linierne hele tiden. Vil vi ændre gøres det ved at trykke på en "0" eller "1" på kontrolbord.

SE kort 292 side 50 samt tegn Push-Buttons in KB

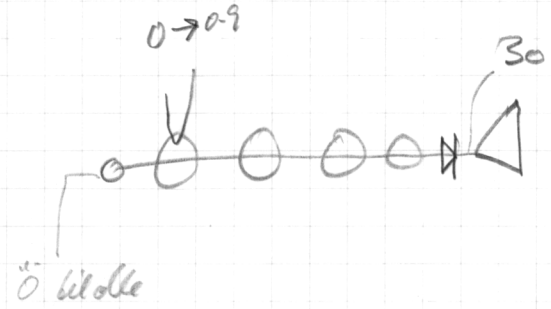

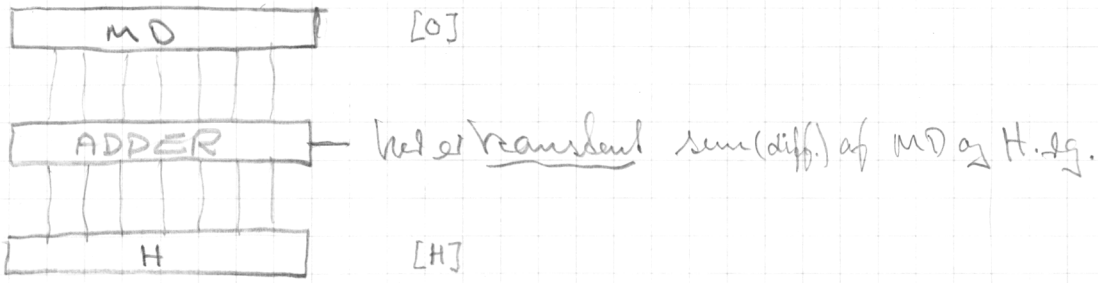

$$H - MD \sim (H + \overline{MD} + 1)$$

Der er i R-reg g adder indført en bit 00 de bliver stillet som cellens 0 når denne overførs.

På 00 kan nu ved beregn konstateres om man har posetiv overløb eller negativt overløb.

Ved pos. overløb fås

Pos →	00	0	1	2	4
posovrl →	0	1	0	0	0

Ved negativt overløb

	1	0	0	0	0

negativ overløb

MD
OG
H
} adressen kaldes altid gennem DIFF

PI 34.t 992

GENNEMGANG AF ET MODE 2 PROGR.

MODE 1 AFSL

	0	1	2	3	4	5	6	7	8	9	10	11	12	13	14	15	16	17	18	19	20	21	22	23	24	25	26	27	28	29	30	31	32	33	34	35	36	37	38	39	40	41	42
IN 34	1	0	1	0	1	0	1	0	1	0																																	
TD (992)												1	1	1	1	1	0	0	0	0																							
34 MD1	0	1	0	1	0	1	0	1	0	1																																	
H	0	0	0	0	0	0	0	0	0	0	0	0	0	0	0	0	0	0	0	0	1	1	1	1	1	1	1	1	1	1	1	1	1	1	1	1	1	1	1	1			
MODE 2 PI																																										
MA1																																										
TD																																										
IN H	1	0	1	0	1	0	0	0	0	0	1	1	1	1	1	1	1	1	1	1	1	1	1	1	1	1	1	1	1	1	1	1	1	1	1	1	1	1	1	1			
MA2 MD												1	1	1	1	1	0	0	0	0	0	0	0	0	0	0	0	0	0	0	0	0	0	0	0	0	0	0	0	0	0	0	0
MA4 MD												0	0	0	0	0	1	1	1	1	1	1	1	1	1	1	1	1	1	1	1	1	1	1	1	1	1	1	1	1	0	0	
TD												0	0	0	0	0	1	1	1	1																							
MA5	0	0	0	0	0	1	0	1	0	1	0	0	0	0	0	0	0	0	0	0	0	0	0	0	0	0	0	0	0	0	0	0	0	0	0	0	0	0	0	0			
MA7 IN	1	0	1	0	1	1	0	1	0	1																																	

SUB
TD → MD 10-19 } MA2
0 → MD 20-41
Add 0-19 → TD } MA4

TD
AD1 → MD logisk multipl. } MA5
0 → MD 10-19
MDO

I-LØKKE INDIKERING

KORT 0252

side 3

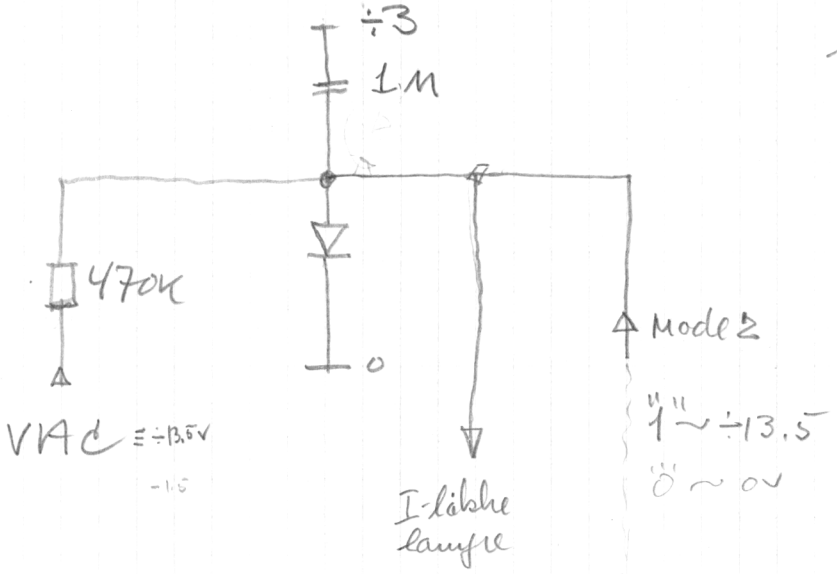

MODE 2

209-2

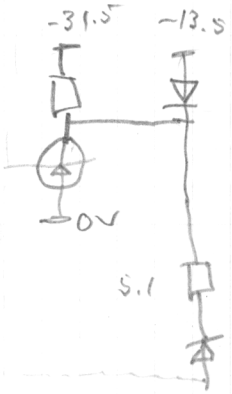

når maskinen går i løkke betyder det at den bliver sendt til en ny ordre under adr. beregning og derfor ikke gemem længere tid når mode 2 som vil aflade capacitetet på 1NF

---

b-c ff. [0209-4] [C6-5]

A/s REGNECENTRALEN	Emne: G·ER STIK	Opg. nr.:	/ 19	Sign.	Side

Stikkene er udskiftet fra Siemens stik til Elco

Papirerne er skrevet efter Siemens. Benævnes 1-15 og 1N-15N (nedre) ved mundtag af Elko er stikkene vendt og de 5 nudterste er ikke lengthet (35 på elko og 30 på siem)

(Siemens øvre sæt er ikke benævnt, nedre sæt benævnt "N")

sie N	Elco	sie	Elco
1	15	1	35
2	14	2	34
3	13	3	33
4	12	4	32
5	11	5	31
6	10	6	30
7	9	7	29
8	8	8	28
9	7	9	27
10	6	10	26
11	5	11	25
12	4	12	24
13	3	13	23
14	2	14	22
15	1	15	21

Da pladerne er vendt vil testpunkterne også være vendt

d.v.s. at testpunkterne tælles nedenfra og op

6
5
4
3
2
1

!

HARDWARE BETEGN.

SYLVEST SOFTWARE BETEGN.

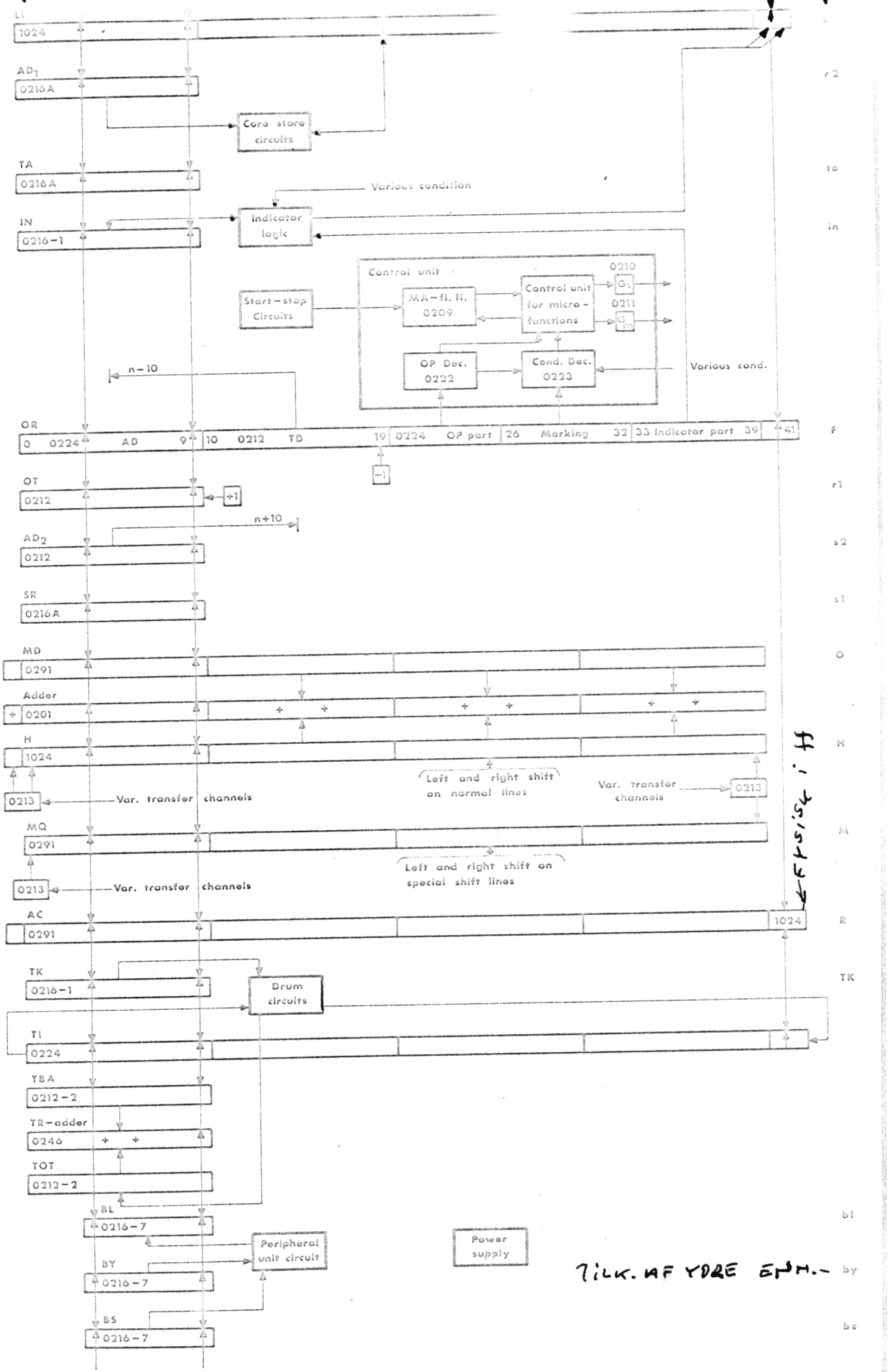

Unit: GIER 6	Designed H.I.	REGISTER DISPLAY	Drawing No
REGNECENTRALEN	Approved		Drawn by G.T. 22.2.65
	Checked 1.2.62		Checked F.C. 26-2-67
	Last Revision		1 Sheets Sheet 1

SYLVEST

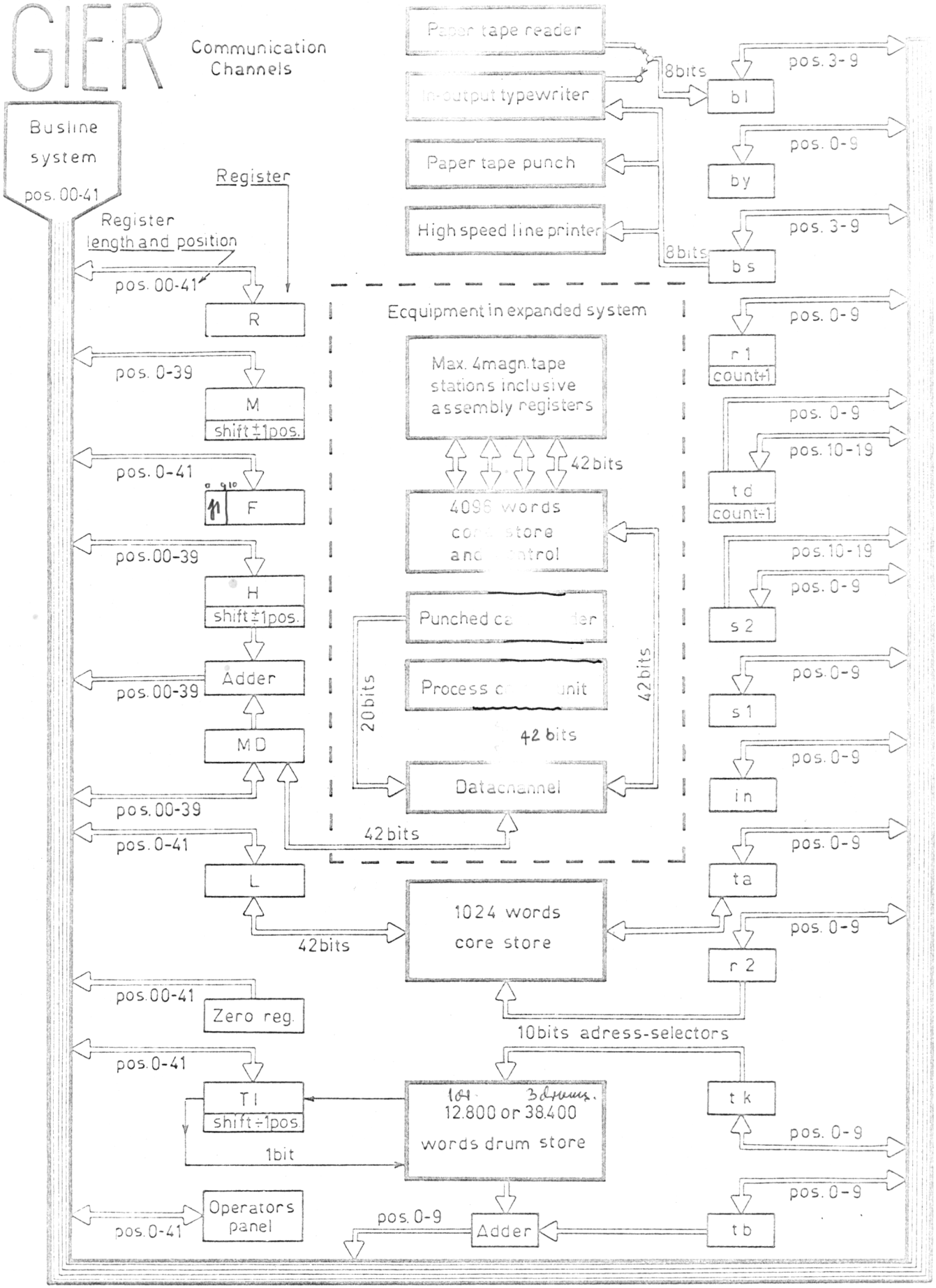

Unit: GIER 6	Designed H.I.	GIER COMMUNICATION CHANNELS	Drawing No
	Approved		Drawn by -----
REGNE CENTRALEN	Checked 1.2.62		Checked F.E. 26-2-67
	Last Revision		1 Sheets Sheet 1

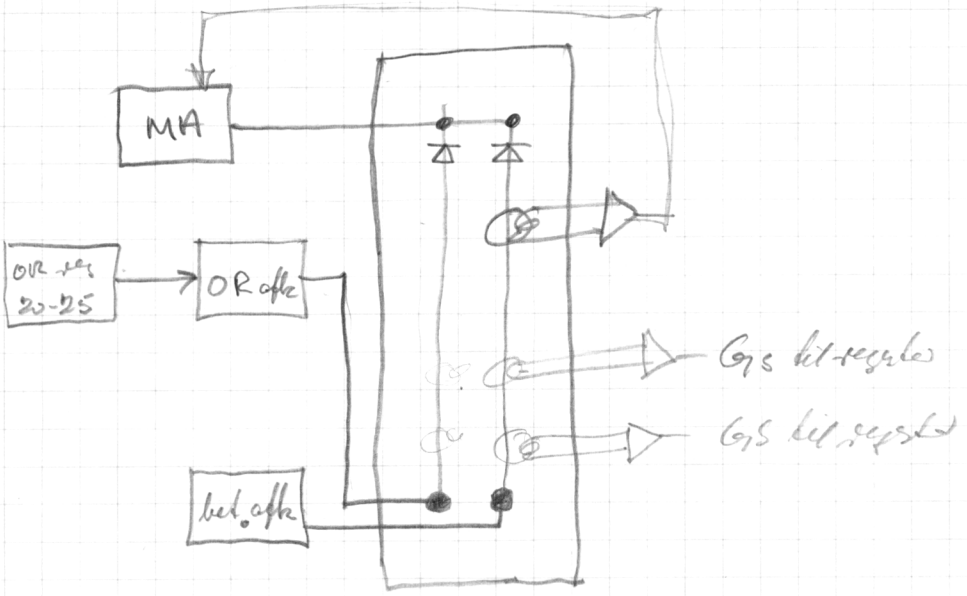

Der er altid valgt et ordre eller et betingelsstårn
ordretårnet kan fakshedde < hv | gr | mode 1 | fu | mode 3 | ck | mk | mode 4 | or | > etc.
altså en mode kan også vare ~~et~~ en ordre.

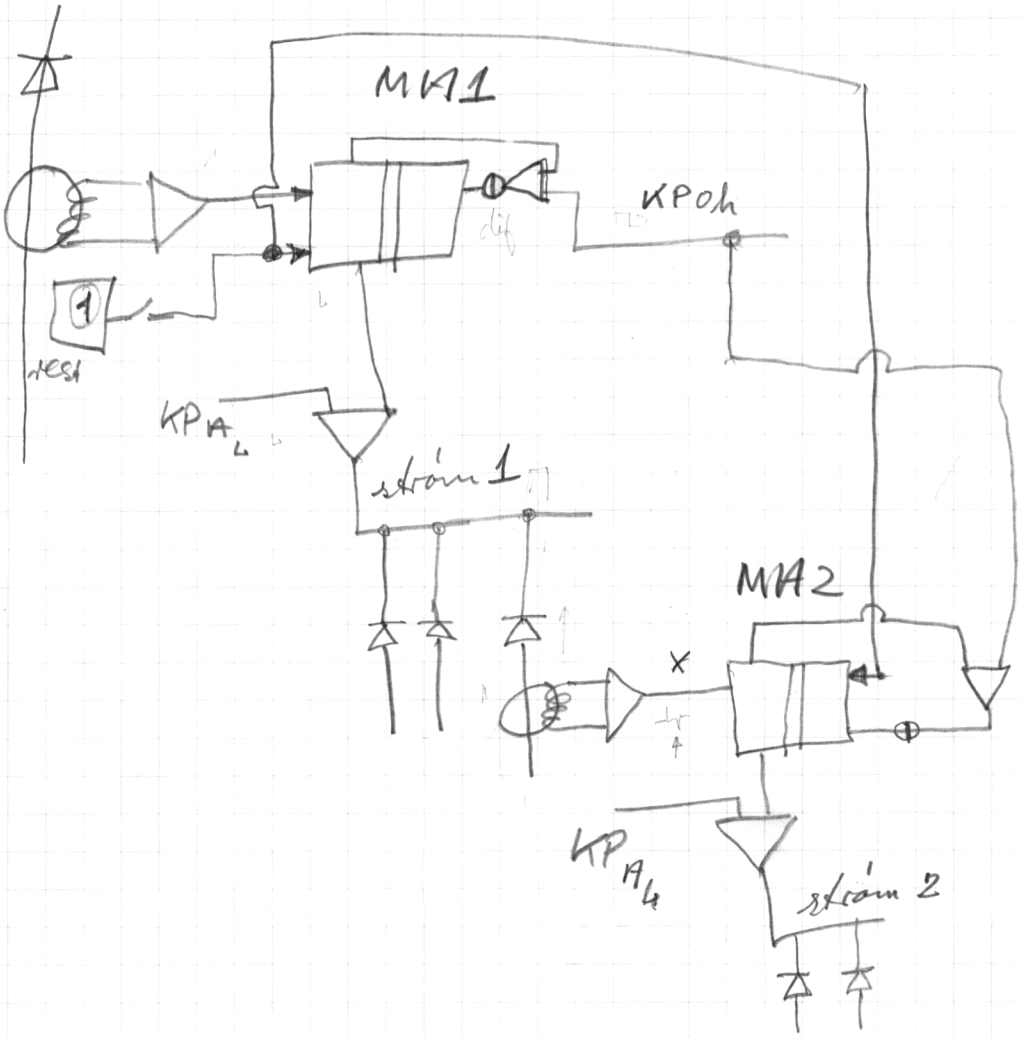

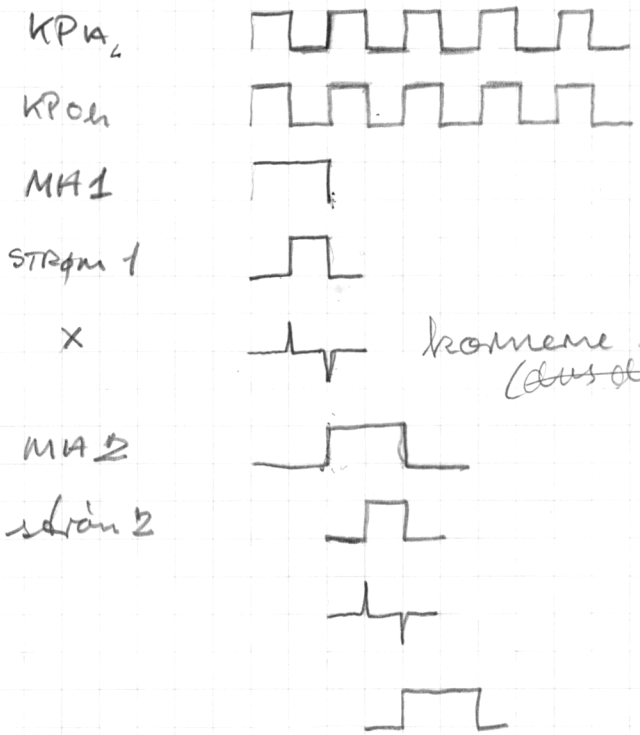

komme til MA inkl. differentierende
(~~dus de må være motningsreaktorer~~ §2)

A/S REGNECENTRALEN	Emne: Mode 2 holdekreds	Opg. nr.:	12/11 1965	Sign. KH	Side 1/1

0222-5 Mode 2 holdekreds

Satelitordrene IS - IT - NS - NT ændrer OR reg. til næste ordre, inden udhop af mode 2, og hopper til mode 1 MA 8. På forkanten af KP vil OR blive ændret, og på bagkanten skal mode 1 og MA 8 sættes, men nu ville afk. af OR reg. være forskellig fra den oprindelige ordre og Mode 1 MA8 ville ikke blive sat. Derfor findes i disse ordrer en holdekreds for mode 2 skal virke ½ stage. Kredsen danner f.f. med op. afk. for IS - IT - NS - NT og holder disses tårne valgt fra afk. er forekommet i mode 2 og indtil næste mode 1.. Selve mode 2 annuleres samtidigt, selvom mode 2 ff. stadig forbliver etstillet.

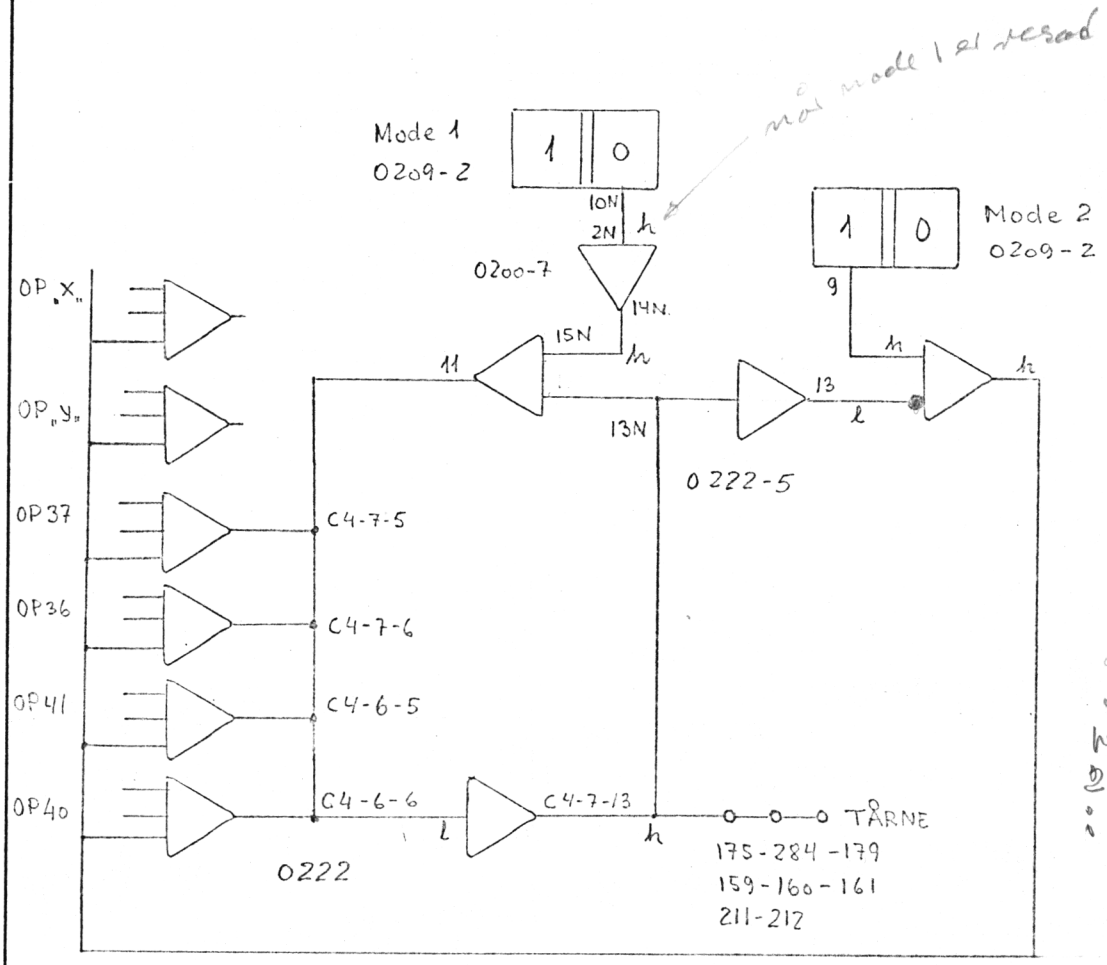

i mikroprogrammet ses at der i nogle tilfælde ændres i OR og hoppes til med MODE 1 MA8 i samme mode 2 MA det er disse der er farlige. Var kredslöbet per ikke ville der sættes 2 MA's og vi ville gå i tom operation.

A/S REGNECENTRALEN	Emne: INDIC. AF TO ~ VO	Opg. nr.:	12/11 1965	Sign. KH	Side 1/3

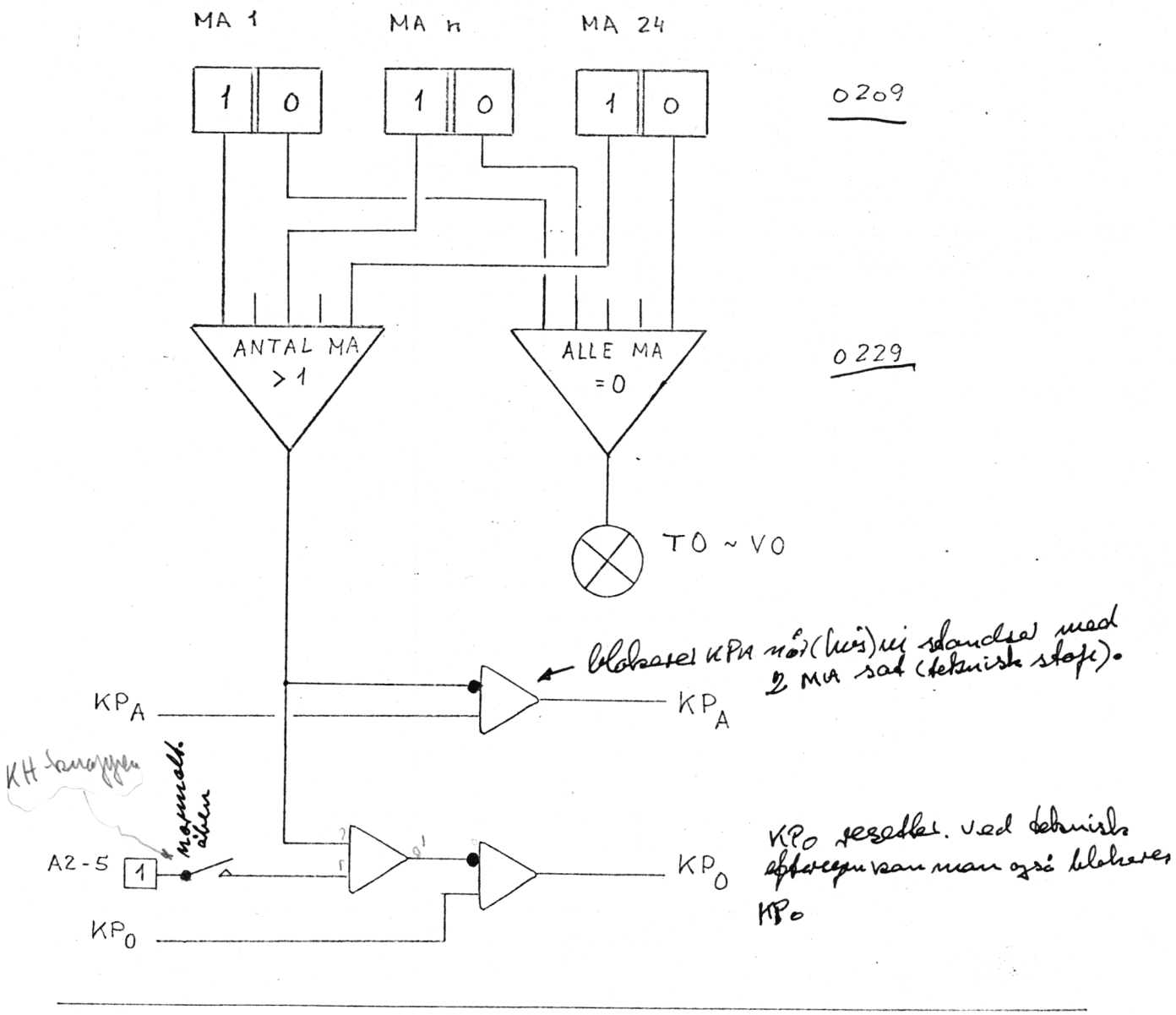

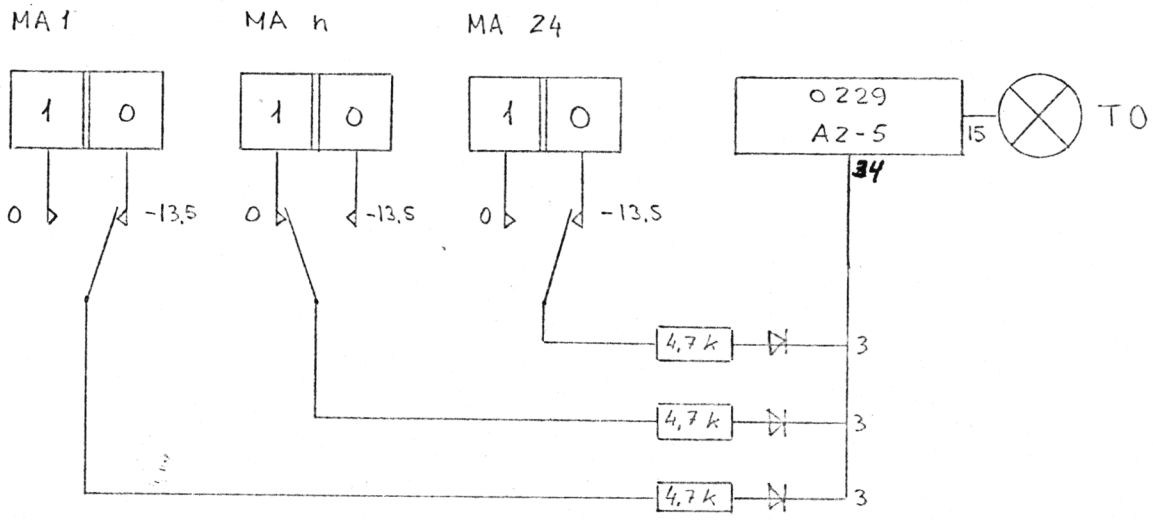

ben 2 ≡ 34 4uf echo

SP. over to stk OA2 204 ~ 14 V

Ben 2 emitterfølger OC 141 kan lede $\frac{14}{3,9}$ = 3,6 mA

Hvis ben 34 bliver mere neg. end ÷14 vil OC 141 - OA 85 lede.

1 MA: Er een MA sat vil ben 34 være ÷14 og gennem 4.7 k fra 0 V vil gå $\frac{14}{4,7}$ = 3 mA. Der vil da gennem OC 141 → OA 85 gå 3.6 - 3 = 0,6 mA, som vil blive leveret gennem 5.1 k fra +10.5 og vil medføre et spænd. fald på 5,1 × 0.6 = 3 volt, hvilket vil medføre at basen på SFT 228 vil være +10.5 ÷ 3 = + 7.5 volt og denne vil være blokeret.

0 MA: Er ingen MA sat vil spændingen på ben 34 være ÷14, og gennem 4,7 k vil kun gå en ringe strøm, mens hovedparten af de 3,6 mA vil gå gennem OC 141 → OA 85. Fra 5.1 k kan leveres $\frac{10,5}{5,1}$ = 2 mA inden basen af SFT 228 når 0 V. De resterende 1.6 mA vil da løbe i basen af SFT 228 og denne vil lede og indik. TO.

>1 MA: Med to MA sat ville spænd. over 4,7 k ≠ 4,7 k være $\frac{4,7}{2}$ × 3.6 = 8.6 volt, dvs. ben 34 ville være 0 ÷ 8.6 = ÷8.6 volt. Dette vil få OC 141 → 220 Ω til at lede, og derved trække ben 34 på ca. ÷13, hvilket blok. OC 141 → OA 85 OC 47 vil lede gennem 2k → OC 141 og derved blok. KPA. Er afbr. sluttet blok. også KP_0.

Hvis kun KP_A blokeres vil ingen ny MA blive sat, men foregående blive reset af KP_0, og derved opstår situationen, ingen MA sat ~ TO
Hvis også KP_0 blokeres vil GIER stoppe i prog. uden indic. TO fordi foregående MA forbliver eetstillet.

0215 plus

Plus betingelsen optræder i MA 24 i op. AN-SN-AR-SR
Hvis plus er adderen indstillet til addition, på et tidligere tidspunkt i mikroprog. og ændres ikke.
Hvis $\overline{plus}$ ændres add. til sub.

OR	23	24	25	
AR		X		2
SR		X	X	3
AN	X			4
SN	X		X	5

	MD. pos.	MD. neg.
AR	plus	plus
SR	$\overline{plus}$	$\overline{plus}$
AN	plus	$\overline{plus}$
SN	$\overline{plus}$	plus

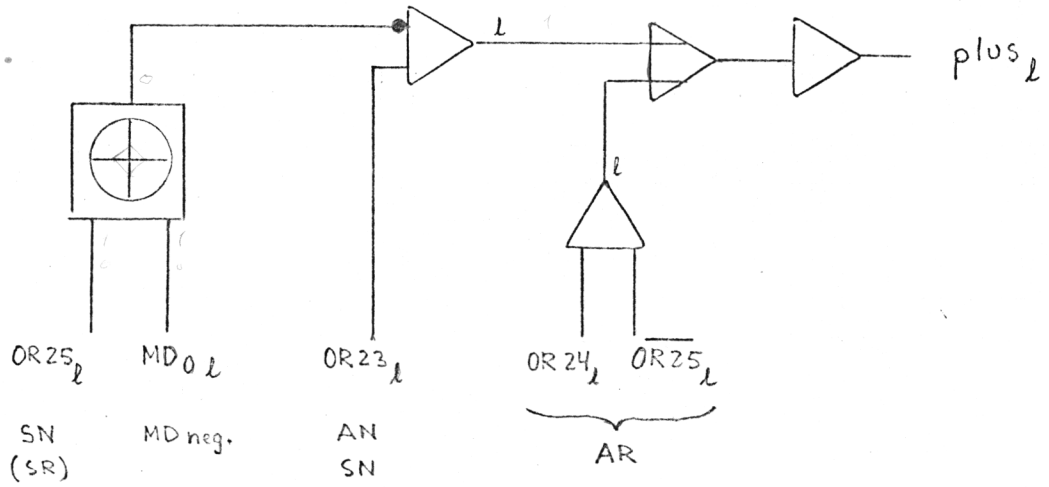

$MD_0 = 1 \Rightarrow MD_{neg}$

AN cellen opfattes pos. og add. til R reg. med fortegn.

H	0 0 0 1 1 1	+7
MD	0 0 0 0 1 0	+2
R	0 0 1 0 0 1	+9

plus → add.

H	0 0 0 1 1 1	+7
MD	1 1 1 0 1 1	-5
R		

$\overline{\text{plus}}$ → sub.

	0 0 0 1 1 1	+7
	0 0 0 1 0 0	+|5|
	1	
	0 0 1 1 0 0	+12

H	1 1 1 0 0 1	-7
MD	1 1 1 0 1 1	-5
R		

$\overline{\text{plus}}$ → sub.

	1 1 1 0 0 1	-7
	0 0 0 1 0 0	+|5|
	1	
	1 1 1 1 1 0	-2

SN cellen opfattes pos. og sub. fra R reg. med fortegn.

H	0 0 0 1 1 1	+7
MD	0 0 0 0 1 0	+2
R		

$\overline{\text{plus}}$ → sub.

	0 0 0 1 1 1	+7
	1 1 1 1 0 1	-|2|
	1	
	0 0 0 1 0 1	+5

H	0 0 0 1 1 1	+7
MD	1 1 1 0 1 1	-5
R	0 0 0 0 1 0	+2

plus → add.

H	1 1 1 0 0 1	-7
MD	1 1 1 0 1 1	-5
R	1 1 0 1 0 0	-12

plus → add.

AR

H	0 0 0 1 1 1	+7
MD	0 0 0 0 1 0	+2
R	0 0 1 0 0 1	+9

plus → add.

H	0 0 0 1 1 1	+7
MD	1 1 1 0 1 1	-5
R	0 0 0 0 1 0	+2

plus → add.

H	1 1 1 0 0 1	-7
MD	1 1 1 0 1 1	-5
R	1 1 0 1 0 0	-12

plus → add.

SR

H	0 0 0 1 1 1	+7
MD	0 0 0 0 1 0	+2
R		

$\overline{plus}$ → sub.

	0 0 0 1 1 1	+7
	1 1 1 1 0 1	-(+2)
	1	
	0 0 0 1 0 1	+5

H	0 0 0 1 1 1	+7
MD	1 1 1 0 1 1	-5
R		

$\overline{plus}$ → sub.

	0 0 0 1 1 1	+7
	0 0 0 1 0 0	-(-5)
	1	
	0 0 1 1 0 0	+12

H	1 1 1 0 0 1	-7
MD	1 1 1 0 1 1	-5
R		

$\overline{plus}$ → sub.

	1 1 1 0 0 1	-7
	0 0 0 1 0 0	-(-5)
	1	
	1 1 1 1 1 0	-2

Operation no.: 2-3-4-5

Operation. AR-SR-AN-SN

MA	Gs	Gm	CS	~~Decoding~~ BET	No	Jump
1	MQ0-9	AD2				
	o10-41	MD10-39				
	Sub.		Read 0-41	OR41 (4)	4b	2
1	Add.					
	Mode 3	Step	Read 0-41	$\overline{OR\ 41}$	4a	16
2	AC00-39,H40-41	MQ0-39				
		Step		S = 1 (m)	24b	4
2	MQ0-9	HQ0-9				
	o10-41	H10-39		S = 0 ($\overline{m}$)	24a	3
3	AC00-39,H40-41	MQ0-39				
	1b			AC* ≠ 0	54b	4
3	AC00-39,H40-41	MQ0-39		AC* = 0	54a	4
4	LI0-9	MD00-9				
	LI10-39	AC10-39				
	LI40-41	H40-41				5
5	o0-9	AC00-9		$\overline{AC10}$	14a	6
5		AC00-9		AC10	14b	6
6	MD0-9	AD1				
	o10-14+o19	TD		b		7
6	MD0-9	AD1				
	1c					
	o10-19	TD		$\overline{b}$		16
7	Add. 00-19	HQ0-9		AC* ≠ 0	54b	8
7	o10-19	TD				
	AD2	AD1		AC* = 0	54a	16
8	H0-9	MD00-9				
	1c			HQ0	15b	9
8	TD Cross	MD00-9		$\overline{HQ0}$	15a	11
9	o0-9	HQ0-9		c		10
10	AD1	AD2		c		7
11	AD2	AD1				12
12	HQ0-9	AD2		b		13
12	HQ0-9	AC00-9				
	Mode 4					
	Overflow	Step		$\overline{b}$		2

Unit GIER 6	Designed H.I.	MICROPROGRAMS	Drawing No
	Approved		Drawn by B.R. 1.11.66
REGNE	Checked 1.2.62		Checked F.E. 8/-2-67
CENTRALEN			2 Sheets Sheet 1

Operation no. [illegible]-4-5

Operation. AR-SR-AN-SN

MA	Gs	Gm	CS.	Decoding	No	Jump
13	Add. 00-19	H00-9		b		14
14	a10-19	TD		$\overline{H00}$	15a	16
14	AD2 Cross	TD		H00	15b	15
15	MQ0-39	H00-39		c		17
15	AC00-39, H40-41	H00-39		$\overline{c}$		17
16	a0-41	H00-39		b		19
16	a0-41 1b	H00-39		c		19
17	H00-39	H1-39 Right Sh. Count in TD				
		Line 00-H00+H0		TD ≠ 0	1b	18
17	Dummy			TD = 0	1a	19
18	H00-39	H1-39 Right Sh. Count in TD				
		Line 00-H00+H0		TD ≠ 0	1b	17
18	Dummy			TD = 0	1a	19
19	AC00-39, H40-41 Add.	MD00-39		c		24
19	H00-39 Add.	MD00-39		$\overline{c}$		20
20	MQ0-39	MD00-39		b		24
22	Add. 00-39	AC00-39		b		23
22	Add. 00-39	H00-9 AC10-39		$\overline{b}$		12
23	Mode 3	Set T1, ab+c Step				1
24	Dummy			Plus (SE TILSKRIFT "PLUS" CKH 12-11-65)	31a	22
24	Sub.	Step		$\overline{Plus}$	31b	22

Unit GIER 6	Designed H.	MICROPROGRAMS	Drawing No.
REGNECENTRALEN	Approved		Drawn by B R 1 11 66
	Checked 1 2 62		Checked F E 15-2-67
	Last Revision		2 Sheets Sheet 2

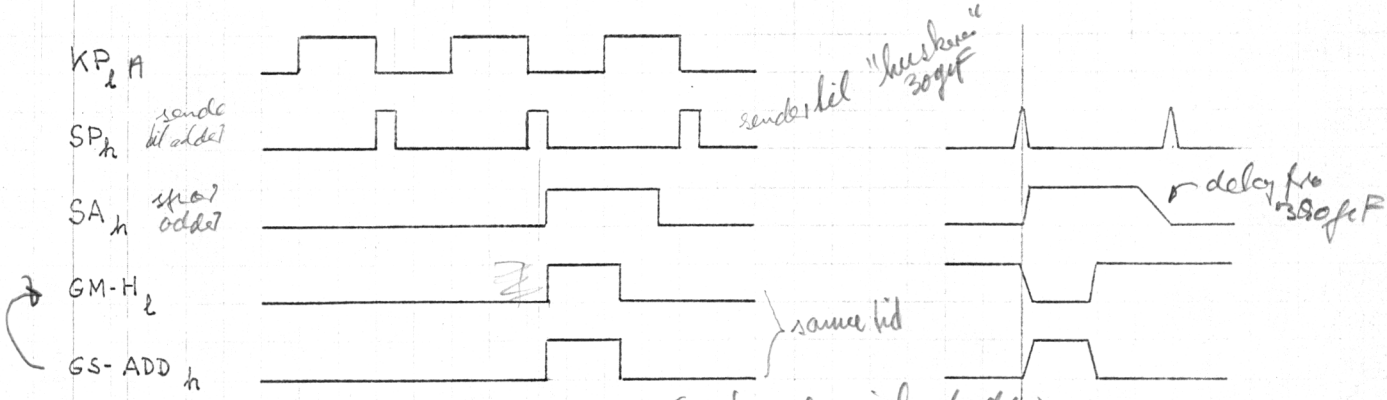

Gmh ordres inh af adder
men det gamle inh er sendt ud fra
300 µF og sporres af dernede

Skemaerne viser de 8 kombinations-
mulighedet.

ADD.

MD	0	1	0	0	1	1	0	1
H	0	0	1	0	1	0	1	1
Mi	0	0	0	1	0	1	1	1
y	1	0	1	1	0	0	1	0
x	1	0	0	1	1	0	0	1
S	0	1	1	1	0	0	0	1
Mu	0	0	0	0	1	1	1	1

"1" ≡ $y \sim MD = 0$, $x \sim MD = H$

"0" ≡ $\bar{y} \sim MD = 1$, $\bar{x} \sim MD \neq H$

SUB.

MD	0	1	0	0	1	1	0	1
H	0	0	1	0	1	0	1	1
Mi	0	0	0	1	0	1	1	1
y	0	1	0	0	1	1	0	1
x	0	1	1	0	0	1	1	0
S	1	0	0	0	1	1	1	0
Mu	0	0	1	1	0	0	1	1

"1" ≡ $y \sim MD = 1$, $x \sim MD \neq H$

"0" ≡ $\bar{y} \sim MD = 0$, $\bar{x} \sim MD = H$

Diagramside 37

Halvadderen bestående af de to emitterfølgere SFT 228 ~~OC 47~~ og 750Ω, vil såfremt x = Mi, have samme spænding på base og emitter og begge SFT 228 ~~OC 47~~ vil være blok. Basen af den efterfølgende OC141 vil ligge på ÷14, og denne vil være blokeret. Næste OC 141 vil derfor lede, og basen af GS-transistoren vil være ÷3, således at denne vil være blok. og linien vil forblive „1" under GS.

Såfremt x ≠ Mi vil een af OC 47 have ÷7,5 på basen og ÷4.5 på emitermodst. Transistoren vil lede og emitteren gå på ÷7.5 og over de 750Ω kan derfor leveres $\frac{7.5 \div 4.5}{0,75} = 4\,mA$. Hvis SP er negativ (÷15) skal disse 4mA leveres gennem 12k ≠ 3.3k ~ 2,5k og vil give et spænd. fald på 2.5 · 4 = 10 V., hvilket ville give en spænd. på ÷21.5 på col. af disse SFT 228 ~~OC 47~~, men disse er klampet til ÷13.5 med en OA ~~160~~ 85, som leverer den resterende strøm, således at punktet holdes på ÷14. Herved er den efterfølgende OC 141 spærret.

Når SP går pos. (÷7.5) vil strømmen til de 3.3k leveres af denne. De 4 mA fra SFT 228 ~~OC 47~~ skal da kun leveres gennem de 12k. Basen af OC141 kan ikke gå mere pos. end ÷13 før denne vil lede, og ved denne spænding vil der i 12k

gå $\frac{31.5 \div 13}{12} = 1.5$ mA, de resterende $4 \div 1.5 = 2.5$ mA er da til rådighed for basen på OC 141 som vil lede og trække basen på den efterfølgende OC 141 på ÷ 13.5 og samtidig oplade kondensatoren på 300 pF. Denne OC 141 vil være blok. fra SP går pos. og indtil kondensatoren er afladet. (ca 2µs) I dette tidsrum vil GS-Adder gå pos. og basen af GS-transistoren følge med således at denne leder og linien bliver trukket på ÷1,5 d.v.s. „0„

ADD SUB

Gamle ben

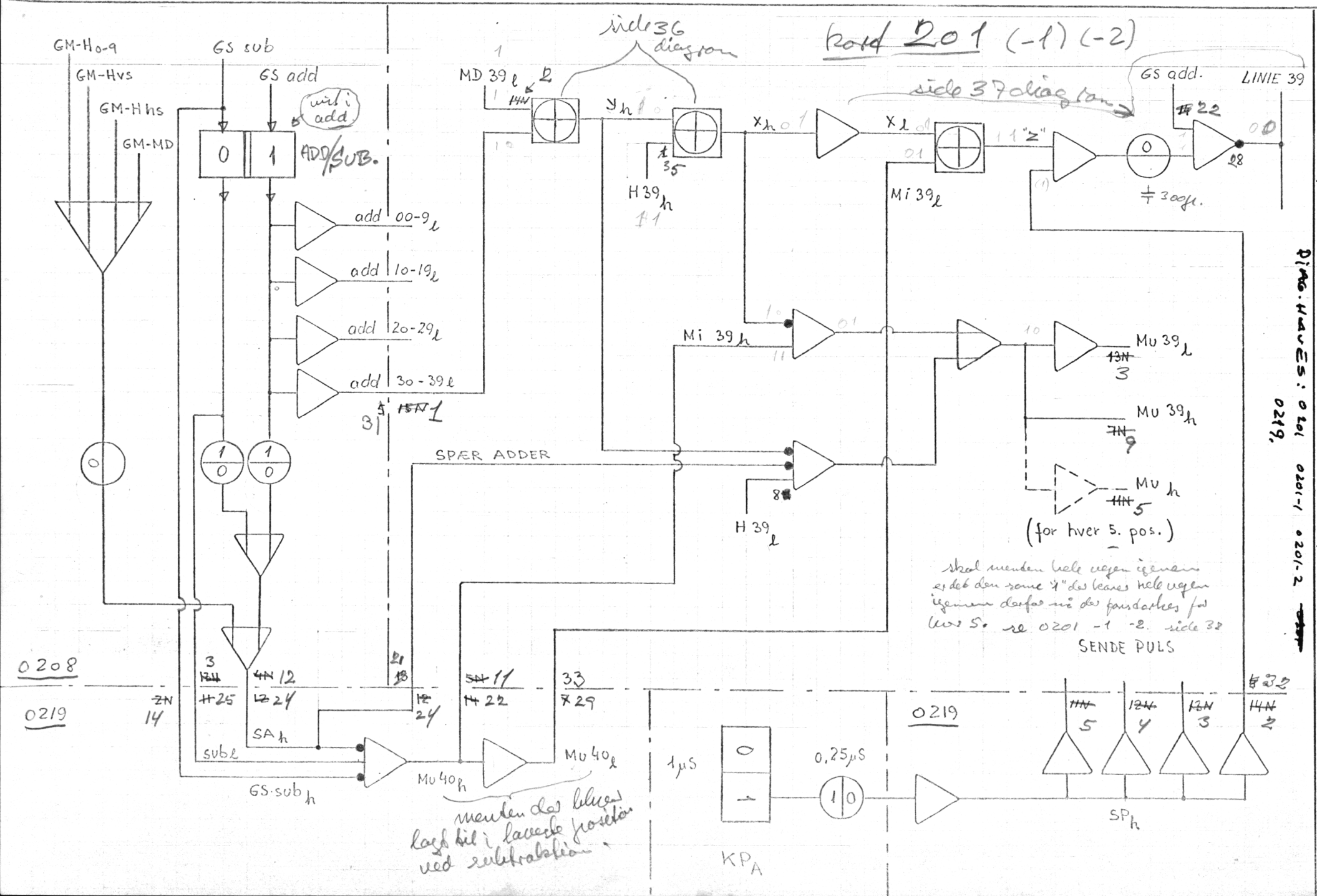

skal menten hele vegen igenem er det den samme "1" der kaver hele vegen igenem derfor må der forstærkes for hver 5. se 0201 -1 -2. side 38

ADDER POS. 39

DIAG. HAVES: 0201 0201-1 0201-2 0219.

12/11 1965. KH

A/S REGNECENTRALEN	Emne: LINIE 00	Opg. nr.:	12/11 1965	Sign. KH	Side 1/1

0229 LINIE 00

såfremt et reg. indeholdende pos. 00 sender til pos. 00-9 blokeres SFT 228 og linie 00 styres af det sendende reg. pos. 00 . dvs. 00 := 00

Såfremt et reg. indeholdende pos. 00, modtager fra linierne, hvorpå der sendes et reg. som ikke indeholder pos 00, vil linie 00 følge linie 0 (12N). dvs. 00 := 0

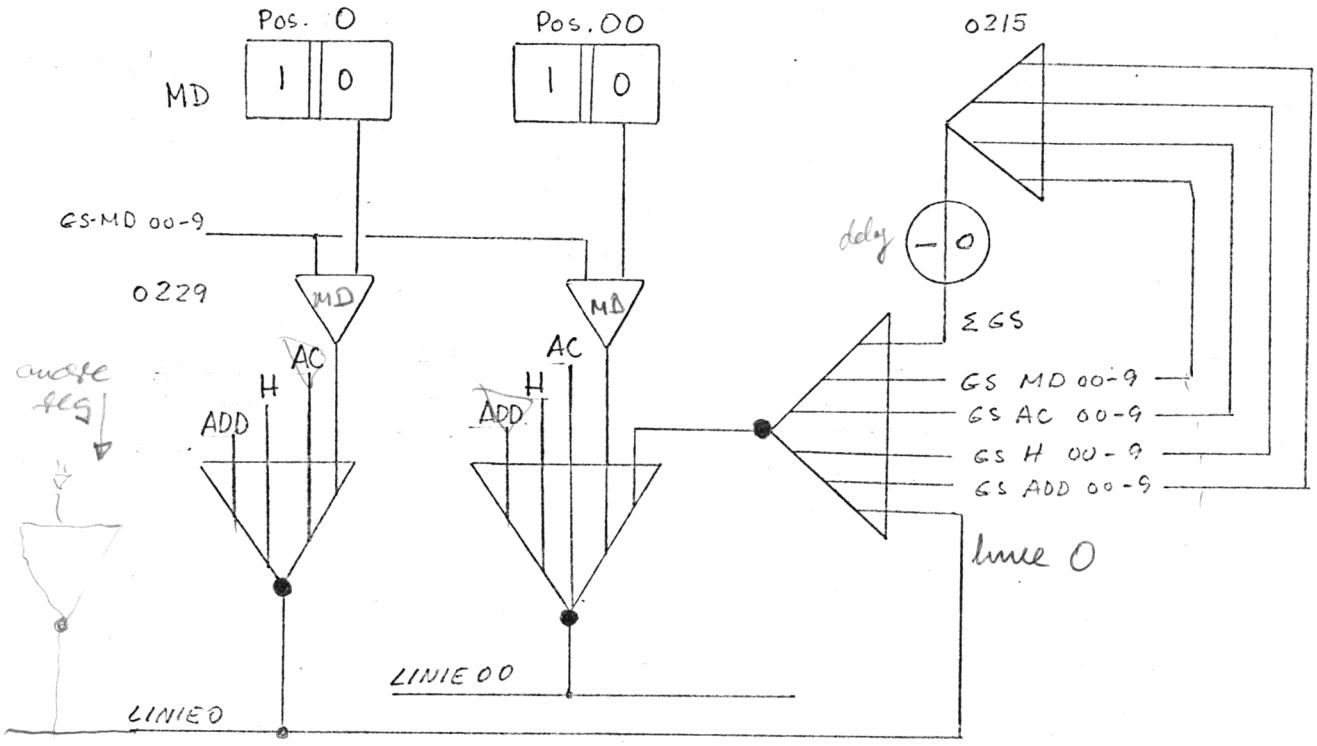

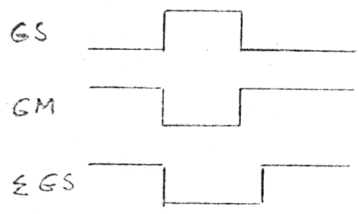

skal sikre sporing af 0→00 når der sendes fra reg. der har pos 00.

for at sikre at en af GS'ene bliver stående lidt longere for at sikre at linien er foldet til 0

I Microprogram (bind 1)

Fejlforløb registreres ved en betingelse (SK nr.)

II Betingelser SK orden (bind 1)
(supl. forklaringer til bet.)

„Oper-trans" angiver hvilken betingelse, der aktiverer ordre tårnet. Er det en sådan, kan denne ikke findes under punkt III, men søges under „styring af OP tårne".

III Sammenhæng mellem betingelser SK-RC orden

„—" angiver hvilken betingelse, der aktiverer ordre tårnet. Er det en sådan søges den under „styring af OP tårne".

Er et OP tårn valgt er spændingen ÷ 4,5 V ellers ÷ 7.5 V
-"- -"- betingelsestårn -"- -"- -"- ÷ 1.5 V -"- ÷ 7.5 V
er en mikroadr valgt -"- -"- ÷ 7.5 V -"- + 4.5 V

Betingelser, RC orden (bind 1)

Nr.	Navn	Repr.	fra	Forstærker ind	Forstærker ud	Krydsfelt H22	Krydsfelt ind
		H	K	I	H	~~G~~	~~F~~

Styring af betingelsestårne (bind 1)

OP	Betingelse SK	Betingelse RC	Krydsfelt H22	Krydsfelt ind	Krydsfelt ud	Beting. trans. ind	Beting. trans. ud	Hart stik nr.	Hart stik ben	Tårn nr.
			~~G~~	~~F~~	~~E~~	D	C	B		A

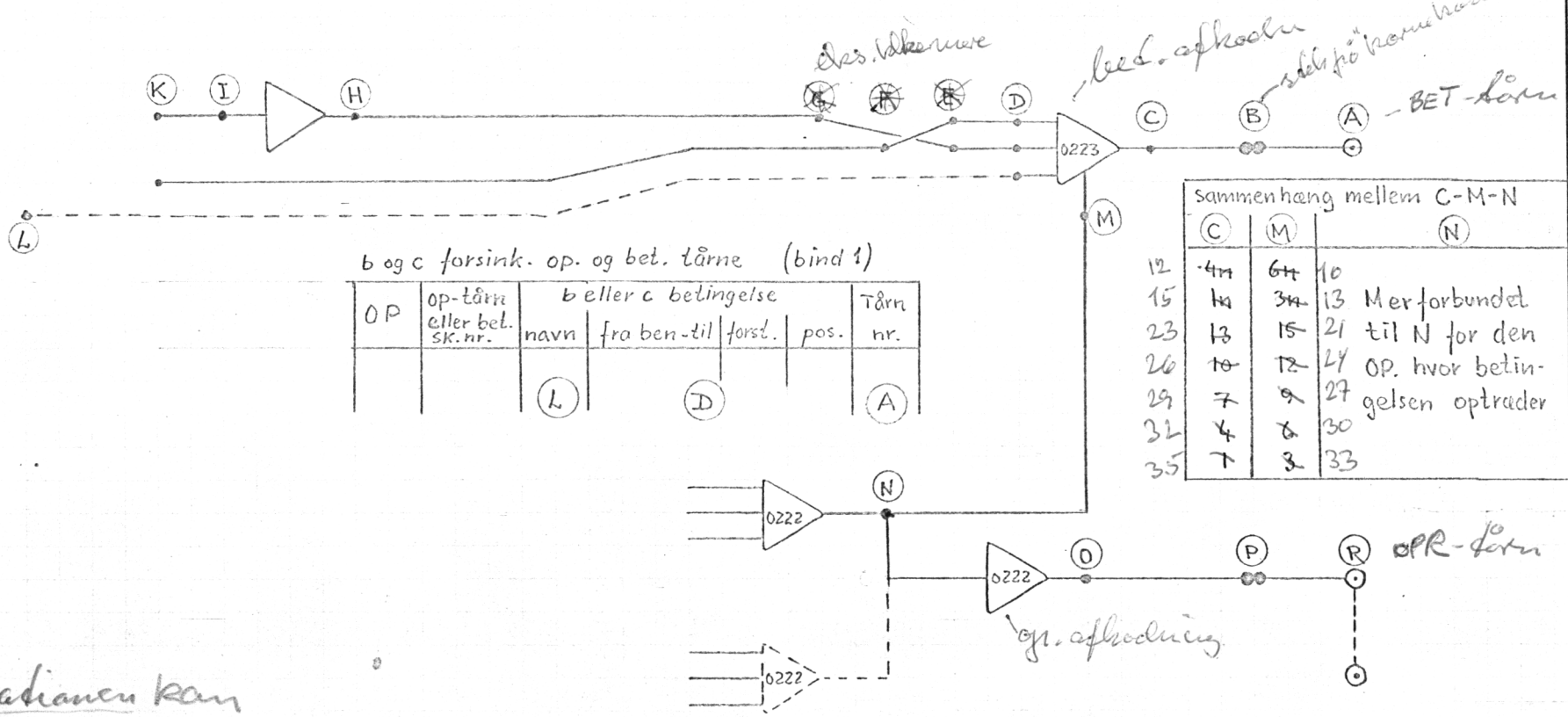

b og c forsink. op. og bet. tårne (bind 1)

OP	OP-tårn eller bet. SK. nr.	b eller c betingelse navn	fra ben - til	forsk.	pos.	Tårn nr.
		L	D			A

sammenhæng mellem C-M-N

C	M	N	
12	~~4~~ 11	~~6~~ 11	10	
15	~~11~~	~~3~~ 11	13	Mer forbundet
23	~~13~~	~~15~~	21	til N for den
26	~~10~~	~~12~~	24	OP. hvor betin-
29	~~7~~	~~9~~	27	gelsen optræder
32	~~4~~	~~6~~	30	
35	~~1~~	~~3~~	33	

"OP" operationen kan VÆRE "MODE 1"
mode 2 til 64 forskellige operationer.

Styring af OP tårne ~~(bind 1)~~ SKEMA 4

OP	Ordre afk. ud plade	Ordre afk. ud ben	ud til bet.	Hart. stik	TÅRN
	O		N	P	R

Operations sammenkoblinger i KE (bind 1)

OP	sammenkd bet. udg.	komponent. demont. fra gruppe	komponent. demont. i pl. pos.	sammen-kobl. tårne
	N			R

Trådn. plan for KE (bind 3)

		OP. nr.			
		OP.			
		Tårn nr.		(R)	
MA nr.	KERNE nr.	DIODER OP	DIODER BET	TÅRN nr	BET nr.
(U)		(S)	(T)	(A)+(R)	

Der kan kun vælges et betingelsestårn eller et operationstårn.

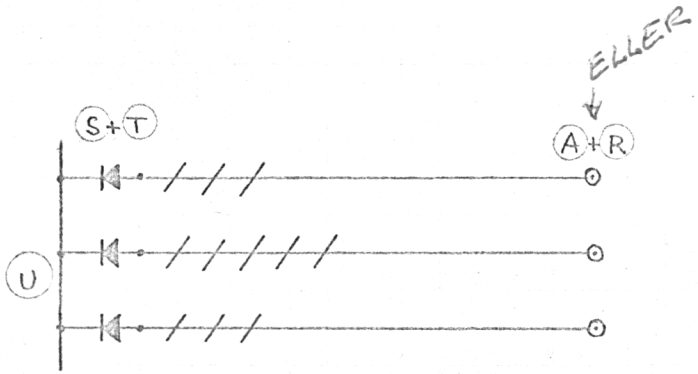

(S) Dioder er koblet på (R) Tårne (OP)
(T) -"- -"- -"- -"- (A) -"- ~~DEL~~ BET

BET. tårne (fundet på arks 2)

(U) findes under Opdeling af Diodegrupper (bind 1)

OP. og BET. afkodning | 22/1 1964 | KH | 3

STYRING AF OP, TÅRNE | 21/11 1967 KH

OP	ORDRE AFK. UD plade	ben	UD TIL BET.	HART STIK	TÅRN
0	C4 - 16	13	6	H16 - W	251
1	- 16	12	5	- X	255
2	- 16	11	4	- KK	297
3	- 16	~~10~~	3	- ~~LL~~	298
4	- 15	~~13~~	6	- MM	299
5	- 15	~~12~~	5	- NN	300
6	- 15	11	4	- A	91
7	- 15	~~10~~	3	- ~~B~~	95
8	- 14	~~13~~	6	H15 - ~~D~~	56-57
9	- 14	12	5	- E	61-62
10	- 14	11	4	- U	201-202
11	- 14	10	3	- L	123-124-125
12	- 13	13	6	- F	66-67
13	- 13	12	5	- B	46-47
14	- 13	~~11~~	4	- ~~C~~	51-52
15	- 13	10	3	- H	71-72
16	- 12	13	6	- V	206-207
17	- 12	12	5	H16 - BB	271 a
18	- 12	11	4	- E	107
19	- 12	~~10~~	3	- ~~F~~	111
20	- 11	~~13~~	6	- ~~H~~	113
21	- 11	12	5	- C	99
22	- 11	11	4	- D	103
23	- 11	10	3	- J	167
24	- 10	13	6	H15 - M	129-130-131
25	- 10	12	5	- Y	221-222
26	- 10	11	4	- CC	23
27	- 10	10	3	- DD	24
28	- 9	13	6	- EE	25
29	- 9	12	5	- LL	37
30	- 9	11	4	- MM	83
31	- 9	10	3	- NN	87

OP	ORDRE AFK. UD plade	ben	UD TIL BET.	HART STIK	TÅRN
32	C4 - 8	13	6	H15 - FF	26
33	- 8	12	5	- HH	27
34	- 8	~~11~~	4	H16 - ~~AA~~	267 a
35	- 8	10	3	H15 - JJ	31 b
36	- 7	13	6	H16 - L	175-284 c
37	7	~~12~~	5	- ~~M~~	179
38	7	11	4	H15 - J	76-77
39	7	10	3	H16 - V	247 d
40	6	~~13~~	6	H15 - ~~T~~	159-160-161 c
41	6	~~12~~	5	- ~~W~~	211-212
42	6	11	4	- X	216-217
43	6	10	3	H16 - Y	259
44	5	13	6	- Z	263
45	5	12	5	- FF	285
46	5	11	4	- HH	289
47	5	10	3	- JJ	293
48	4	13	6	H15 - BB	236-237
49	4	~~12~~	5	- ~~S~~	153-154-155 d
50	4	~~11~~	4	H16 - ~~CC~~	273 a
51	4	10	3	H15 - Z	226-227 b
52	3	13	6	H16 - N	183
53	3	12	5	- P	187
54	3	11	4	- R	191
55	3	10	3	- K	171
56	2	~~13~~	6	- ~~DD~~	277 a
57	2	12	5	- S	195
58	2	11	4	- T	197
59	2	10	3	- U	243
59	2	10	3	H21 - S	260
60	1	~~13~~	6	H16 - ~~EE~~	281 a
61	1	12	5	H15 - R	147-148-149
62	1	11	4	- P	141-142-143-286
63	1	10	3	- KK	35

eks:

~~DD~~ forbindelsen til Hstik ~~LL~~ er er udført, men ender her blindt.

a a a er indbyrdes forbundet.

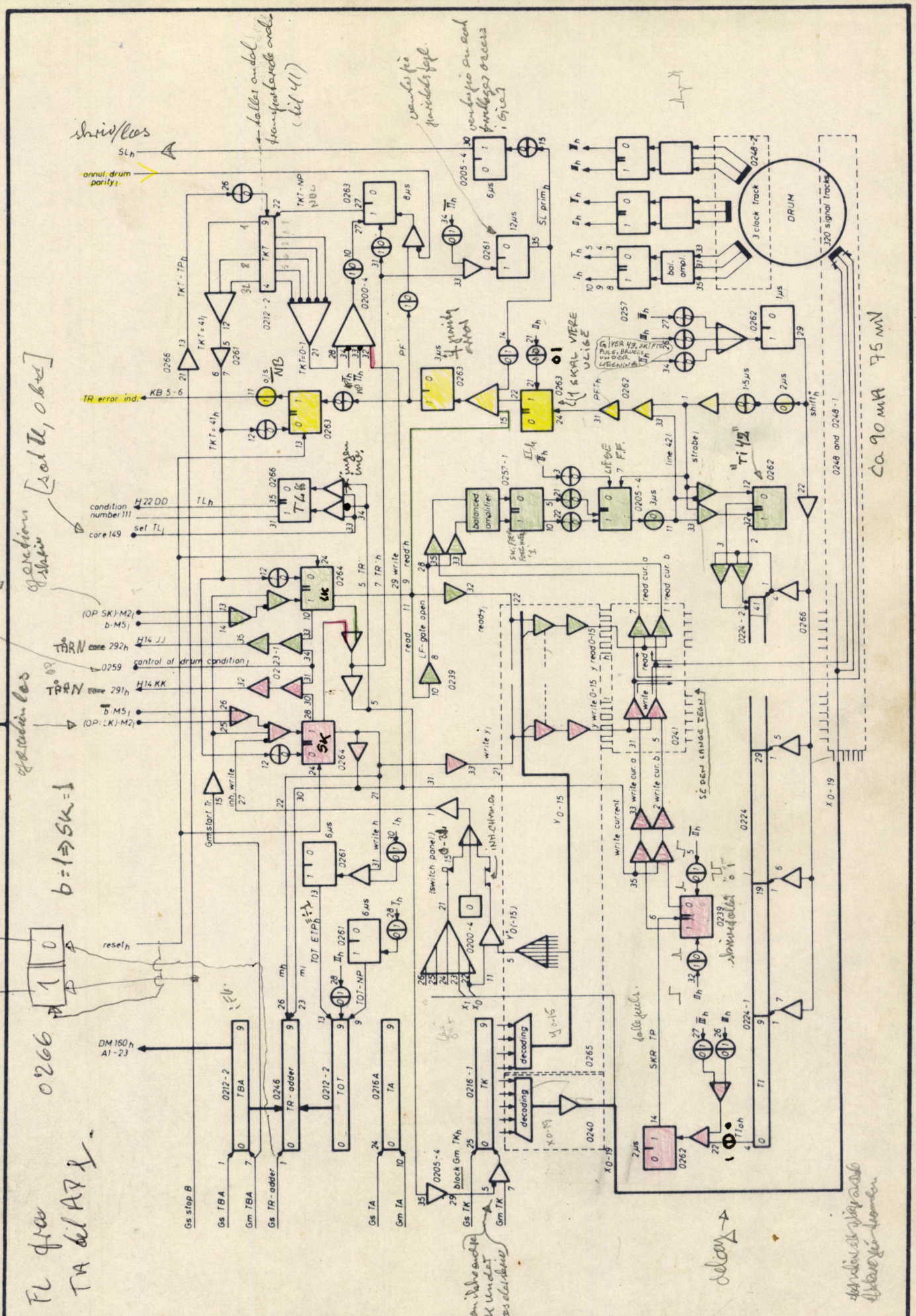

Unit: GIER 6	Designed P.E.P.	BLOCKDIAGRAMS FOR DRUM CIRCUTS	Drawing No
REGNE CENTRALEN	Approved		Drawn by G.T. 9.9.66
	Checked 12.12.64.		Checked F.E. 22-2-67
	Last Revision		1 Sheets / Sheet 1

18

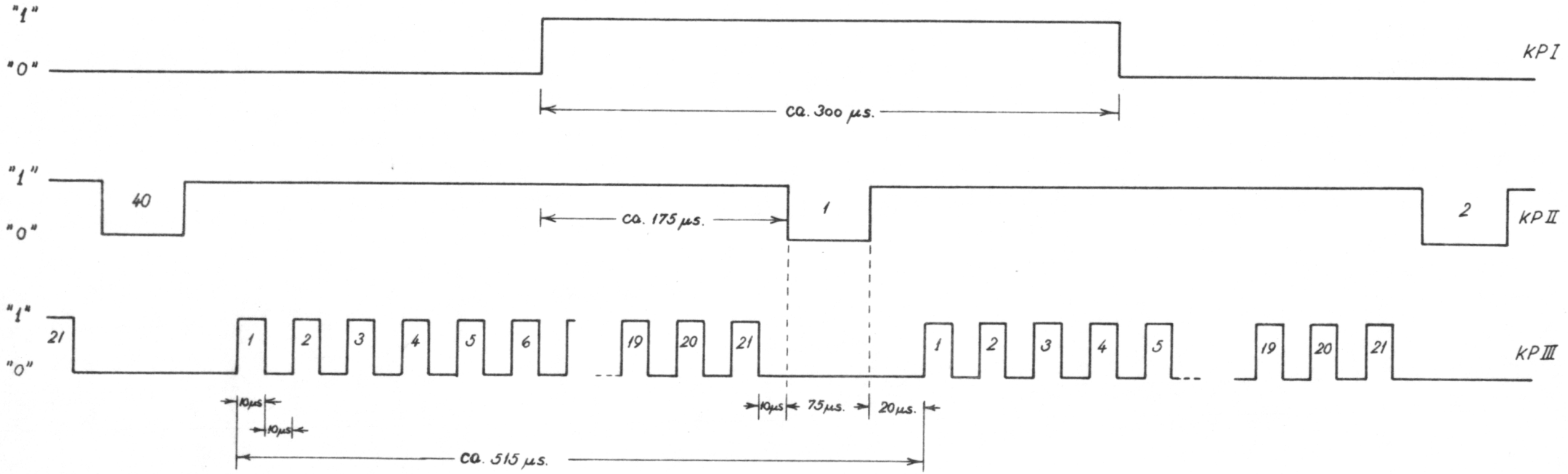

GIER drumcircuits

Clockpulses I, II and III

9.9

A2

Paritetsmarkning ved indlæsns

Ved ordets start bliver skrivetaller FF (på 0239) 1-stillet af II_h gennem et diff. led på pin 32. Herefter sker trigningen symetrisk på pin 6 fra den monostabile på 2 µs (0262) Første "1" vil 0-stille og ~~mo~~ næste "1" vil igen 1-stille skr. ff. dvs. ~~fr~~ når der er modtaget et lige antal "1" fra TI vil skr.talle FF være 1-stillet det medfører at den 0-stilles når $\overline{II_h}$ kommer ved afslutningen; dette giver en strømvending i hovedet, hvilket opfattes som modtaget et 1-tal. Det er altså paritets-bitten der kun kommer når det modtagne synal fra TI + den bit der blev lovet da skr. ff. blev 1-stillet ved modtagelsen af II. Et ord på framlen består således af et ulige antal "1"-taller.

(H)

0,4μ excentricitet max, 2000 lets pr spor

TROMLE (4,2 lit/mm) ≡ 100 lets inch 23,6 m/s

max 0,2°/min, 20-30° 20μ belagning 150 mm cylinder

~~18000~~

336 signalhovecer ⇒ 16 reserveh.

snorg 2200 timer

leger 5 år's levetid

KP I 1 pr andr

KP II 40 pr andr ≡ 1 pr ord

KP III 40 x 21 pr andr ≡ 1 pr lit



TOT taller 40 ord

TA taller FL adr. bruges til vendecelle når det skal bruges overføres det til AD

FORKORTELSER PA BLOCKDIAGRAM.

12345 6789 TK pose

TK ~ valg af kanal X_{0-19} Y_{0-15}

TBA ~ Første celle i c.s. (SK: TBA := 100)

TOT (tromle ord tæller) ord numer under læsning/skrivning

(tæller på forhand af ordet.)

Tr. add ~ TBA + TOT (+ 1 ved SK)

TKT ~ tæller antal ord transporteret (til 41 ord)

Forkortelser pro side 18 drum blockdiag

SL ~ skriv/læs

TL ~ tromle ledig

PF ~ poritetsfejl

LF-gate open ~ læseforstærkerålen

PFT ~ poritetsfejl trig

m ~ mente

TOT ETP ~ TOT et stillingspuls

-"- NP ~ nulstillingspuls

7550

STRØMMEN i ET skrivlos HOVED.

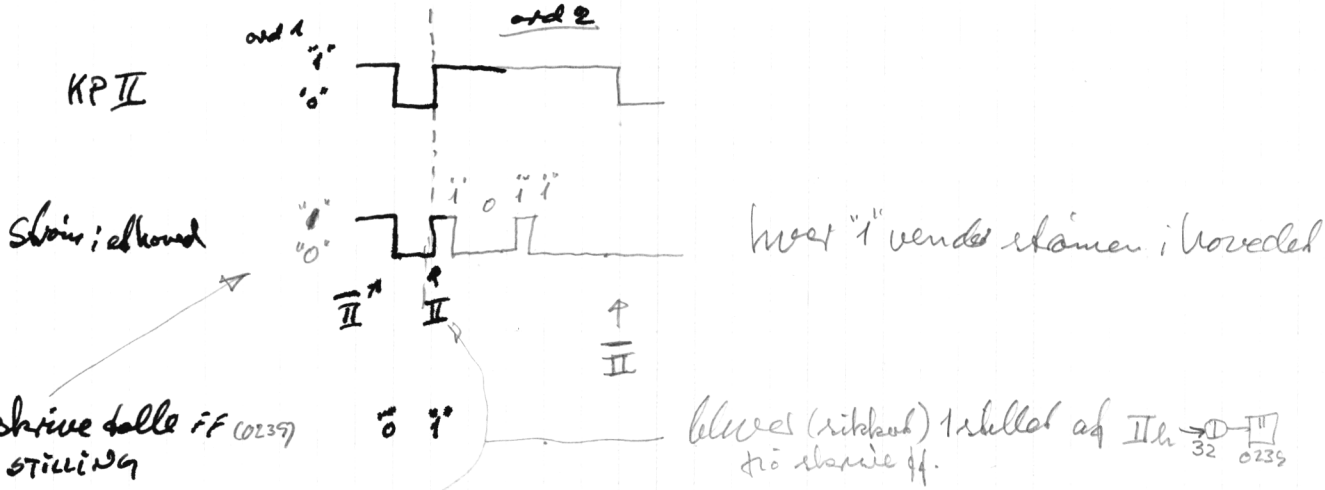

forkanten vil give et 1-tal som de ikke er inf. i men den hvier skiftetnd overkanten da der sker 43 skift.

vedindkoblig under KP I kan 2 ord gå galt 0 g 39 der må da transporteres 42 ord for at reetoller 2.

exil, h 300 eks

6-7

2
4
28
16
32
6 8

Kp III g $\overline{III}$ giver 42 skiftepulser
Kp $\overline{II}$ giver den 43. klockpuls



TROMLEKREDSENES FUNKTIONER.

Hovedprincip.

Overførslen mellem tromlen og ferritlageret er opdelt i en tromle-synkron serietransport mellem tromlen og bufferregisteret TI og en GIER-synkron paralleltransport mellem TI og LI.

Under udførelse af ordrerne LK og SK varetager tromlekredsene beregningen af den resulterende ferritlageradresse og udfører serietransporten mellem tromlen og TI simultant med GIER. Først til det tidspunkt hvor paralleltransporten mellem TI og LI er klar til udførelse, afbrydes GIER's normale arbejdsprogram i ca. 26 µS, medens transporten finder sted styret af KE, som i dette tidsrum drives af 8 specielle MA-flip-floper: MAB. Da tromlen drives af en asynkron motor med 3000 omdr./min., og en kanal indeholder 40 ord, vil der mellem disse afbrydelser forløbe ca. 500 µS.

Kanalvalg.

Kanalvalget foretages med ordren VK, hvorved kanalnummeret modulo 512 overføres til TK. Enhver tromletransport forudsætter normalt, at en af tromlens kanaler 0 - 319 er valgt. Forsøges skrivning på en ikke eksisterende kanal (nr. 320-511 eller 832 - 1023) bliver tromlekredsene optaget med "udførelse" af ordren i ca. 21 mS, uden at de 40 ord dog bliver placeret noget sted på tromlen.

Forsøges læsning af en ikke eksisterende kanal, protesterer tromlen og tænder kontrolbordets fejllampe TR. De 40 modtagende celler i ferritlageret nulstilles, men tromlekredsene forbliver optaget med ordrens "udførelse", indtil kontakten "annul. af TR-paritet" betjenes.

Tromlens 320 kanaler overføres via 320 læse/skrivehoveder mekanisk fordelt på 40 stik (D2-D11, A2-A11, B2-B11 og C2-C11), men kredsløbsmæssigt fordelt i 20 grupper å 16. Kanalnummeret findes lagret i TK, hvorfra det afkodes gennem en x-afkodning af bit 1 - 5 i 20 (ud af 32 mulige) grupper og gennem en y-afkodning af bit 6-9 i 16 y*-værdier. Den endelige udvælgelse af det

til kanalnummeret hørende læse/skrivehoved finder imidlertid først sted under effektueringen af LK- eller SK-ordren, idet tromlekredsene først på dette tidspunkt kobler hovedet ind som læsehoved eller som skrivehoved.

For at forhindre at man fra kontrolbordet kan ødelægge kanalvalget ved forandring af TK under en SK ordres udførelse fås på plade 0205-4 et signal blok Gm TK, der gør indlæsning i TK umulig, sålænge en tromleacces er igang.

Låsning af Kanaler.

Tromlekanalerne kan aflåses for skrivning på to måder, enten med enkeltlåsning betjent af en omskifterkontakt på omskifterpanelet over B1 eller med dobbeltlåsning, hvor kortslutningsbøjlen på plade 0200-4 kan betragtes som den ekstra lås. Enkeltlåsningen kan omfatte indtil 5 grupper å 16 kanaler og er ved leveringen monteret til at omfatte kanalerne 0-31. Ønskes enkeltlåsningen at omfatte flere end disse 2 grupper, forbindes den ønskede x-gruppe til en af reserveindgangene på 0200-4. For eks. vil en tilføjelse af forbindelsen C3-20-15 → C5-21-12 udvide omskifterens spærringsområde, således at dette fra at omfatte kanalerne 0-31 kommer til at omfatte kanalerne 0-47.

Dobbeltlåsningen kan omfatte indtil 16 af kanalerne 0-15 og er ved leveringen indstillet til at omfatte kanal 0. Oplåsning af kanal 0 foretages ved fjernelse af kortslutningsbøjlen på plade 0200-4 samt betjening af omskifterpanelets omskifter. Ønskes dobbeltlåsningen at omfatte flere kanaler end kanal 0, forbindes de ønskede y-afkodningsværdier til C5 - 21 - 11n. Dette foretages på 0265's stik. For eks. vil tilføjelsen af forbindelsen C3 - 24 - 1n → C3 - 24 - 3n udvide kortslutningsbøjlens spærringsmulighed fra at omfatte kanal 0 til at omfatte kanal 0 og 1.

En Sk-ordre i forbindelse med en aflåst kanal afvikles uden ordtransporter til tromlen på ialt 9 µS.

Tromlekloksspor.

Der er indspillet tre kloksspor på tromlen. Signalerne føres fra tromlen til hver sin forstærker 0257, hvor de styrer en flip-flop. Kloksspor I giver synkroniseringsimpuls for lokalisering af ord nul, kloksspor II giver synkroniseringsimpulser for hver af de 40 ord på en kanal, og kloksspor III benyttes til synkronisering af de enkelte bit.

Start af tromletransport.

Tromleordrerne LK og SK indledes med en Gm sæt TL, som indlæser værdien af $\overline{TR'}$ til en flip-flop i 0266. $\overline{TR'}$ = 0 angiver, at tromlen er klar til at udføre en ordre, og $\overline{TR'}$ = 1, at den er igang med enten læsning eller skrivning. Flip-flop'en er indskudt som buffer mellem tromlekredsene og betingelsesafkodningen til KE, således at betingelsen TL, tromlen klar, ikke skifter, netop som den benyttes under et mikrotrin. Betingelsen TL kan iagttages på en DM 160 indikatorplade indsat i A1-23, lampe nr. 2 fra stikket i nederste række tændt får tromle klar.

Såsnart tromlen er ledig, fås under udførelse af ordrerne LK og SK en Gm start TR, som sætter den ene af flip-flop'erne på 0264. Valget af flip-flop'erne bestemt af OP-afkodningen og under resten af tromleaccessen vælger flip-flop'en det klokpuls B-program, som bestilles af tromlen, hver gang et ord er parat til paralleltransport mellem TI og LI. Af hensyn til paritetskontrollen er bestillingen forsinket ca. 10 µS gennem 0261, hvorefter den videreføres som $\overline{SL'}$ til start-stopkredsene gennem synkroniseringsbufferen i 205-4. TKT nulstilles ved begyndelsen af en tromleacces og tælles een frem efter hver ordtransport.

Idet tromleaccessen kan startes på et vilkårligt sted af en tromleomdrejning, vil første ordtransport sandsynligvis være ukorrekt, hvorfor den 41. transport benyttes til korrekt overførsel af dette ord. Når TKT = 41, er alle 40 ord rigtigt overført, hvorefter tromleaccessen afsluttes ved nulstilling af flip-floppen på 0264. Såfremt SK-ordren indledes under sidste del af ord nr. 39's passage af læse/skrivehovedet, vil den 41'ende tællepuls til TKT bevirke afslutning af tromleaccessen umiddelbart før rettelsen

vedrørende denne fejl se skreven side (KH.) og ogs.

af det forkert skrevne ord skulle være foretaget. Af hensyn hertil foretages, når denne situation forekommer, en ekstra nulstilling af TKT, før ord nr. nul skrives første gang.

Adresseberegning.

Tromleordrens adressedel overføres til TBA og angiver adressen på den celle i FL, som skal korrespondere med den valgte tromlekanals ord nr. nul. Denne adresse og de øvrige 39 adresser beregnes i tromleadderen, hvori summen af TBA og TOT dannes, idet TOT angiver nummeret på det ord, der sidst har passeret læse/skrivehovedet. For ordren LK vil denne sum angive adressen på den modtagende ferritlagercelle. For ordren SK er det nødvendigt at kende nummeret på det ord, der næste gang vil passere læse/skrivehovedet. Dette gøres ved en mentetilførsel i TR-adderens laveste position, idet summen herved øges med 1. For at kunne overføre til ord nul sættes TOT lig med ÷ 1 under 39's passage af læse/skrivehovedet. Indholdet af TBA kan iagttages på en DM 160-indikatorplade indsat i A1-23; lampe nr. 3-12 fra stikket i nederste række viser TBA_{0-9}.

Tidsdiagrammet for ferritlageradresseberegningen er vist på blokskemaet over tromlekredsene.

Under afvikling af B-programmerne overføres indholdet af TR-adder til TA, og ferritlagerets adressevalg skiftes fra AD_1 til TA under første B-puls. Under 3. B-puls foregår paralleltransporten, og ved sidste B-puls føres ferritlagerets adressevalg tilbage til AD_1. Styring af valget foretages med en flip-flop på 0266.

Ordtransport.

Skiftningen i TI er venstre skift, således at informationen læses ud af TI til tromle fra position nul ved skrivning på kanal og ind i position 41 fra tromle ved læsning fra kanal. Skiftepulsen styres fra en monostabil multivibrator på 0262. Der foretages 43 skift til de tidspunkter, hvor klokpuls III vender, samt hvor klokpuls II skifter fra 1 til 0. Ved skrivning anvendes NRZ-metoden, idet strømretningen i læse/skrivehovedet vendes, lige før ordbegyndelse, for hver bit = 1, samt efter ordslutning, Hvis → FORTS

Mone reduru fo zero

(TI + den første "1")

hvis antallet af ettere var lige. Den sidstnævnte vending danner paritetsbitten og forekommer automatisk som følge af, at strømretningen i ordmellemrummene altid er den samme. Skriveforstærkeren med styre-flip-flop'en i 0239 sættes frem, når klokpuls II går fra 0 til 1 og tilbage, når klokpuls II går fra 1 til 0, medens flip-flop'en trigges symmetrisk, hver gang klokpuls 3 skifter mellem 0 og 1, såfremt $TI_0 = 1$. Læse/skrivehovedet har midtpunktsudtag, og under skrivning sender forstærkeren strøm i en af de to halvdele. Ved trigning skiftes strømmen til den halvdel, som før var strømløs, hvorved magnetiseringen skifter.

Under læsning induceres en spænding i læsehovedet, hver gang magnetiseringen skifter. Dette signal går, styret af kanalvalget, gennem en læseforstærker 0257-1 med flip-flop udgang, som giver triggesignal til en flip-flop i 205-4 for hver bit = 1 i ordet, samt når klokpuls II skifter fra 0 til 1, og eventuelt når klokpuls II skifter fra 1 til 0. Flip-flop'en, der er afsluttet med en korttidshukommelse, sættes ved samtlige magnetiseringsændringer og resættes, når klokpuls II skifter fra 0 til 1 og af stroben, som er en 3 µS forsinkelse af tidspunktet for klokpuls II's skift fra 1 til 0 samt klokpuls III's skift mellem 0 og 1. Det eventuelt indlæste signal overføres til TI_{42} gennem en symmetrisk indlæsegate styret af stroben.

Det sidste tegn, der læses, er en eventuel paritetsbit, som overføres til TI_{42}, når klokpuls II skifter fra 1 til 0. Da denne indlæsning ikke er efterfulgt af skift, står paritetsbitten stadig i TI_{42} under paralleltransporten af TI til LI, men skiftes ud over TI_0 ved de følgende 43 skift under indlæsningen af næste ord. Læsning af vendingen ved IIa finder ikke sted, idet der ikke genereres nogen strobe.

Paritetskontrol.

Paritetskontrollen er en lige/ulige test af indholdet i TI, før dette overføres til LI og udformet således, at der tillige indiceres fejl for læsning af en ikke eksisterende kanal eller for en kanal, der ikke er skrevet på.

Bittælleren i 0263 er ved ordbegyndelsen ~~nulstillet~~ ombestillet og trigges for hver gang, der indlæses en 1er i TI_{42}. Dette antal skal være ulige, idet et eventuelt [illegible] antal 1ere i det læste ord som følge af skrivemetoden automatisk er blevet suppleret med en paritetsbit.

Til det tidspunkt, hvor IIb går positivt, skal bittælleren være 0-stillet, for at overførslen fra tromlen til TI kan have været korrekt, i modsat fald frembringer signalet $\overline{SL}$ via to monostabile multivibratorer på 0263 en nulstillingsimpuls til TKT, hvorefter der skal foretages 40 rigtige transporter, før kanaltransporten kan afsluttes. Er fejlen sporadisk, kan den være forsvundet ved den følgende læsning af ordet, men skyldes den en defekt i tromlebelægningen, afsluttes kanaltransporten først, når kontakten til annullering af tromleparitetsfejl betjenes, hvorved den fejlbehæftede kanal overføres til FL, eller såfremt der resættes.

På kontrolbordet angiver fejllampen for TR, at tromlekredsene ikke kan rette læsefejlen trods vedvarende gennemløb af kanalen.

Såfremt en skriveordre indledes på et tidspunkt, hvor sidste del af ord nr. 39 er ved at passere skrivehovedet, genereres der i 0200-4 en ekstra nulstillingsimpuls til TKT; således at det i første omgang eventuelt forkert skrevne ord nr. 0 virkelig bliver rettet, før end TKT når op på 41, og hermed afslutter accessen.

Samtidig med nulstillingen af TKT ved paritetsfejl sættes en flip-flop på 0263, som styrer kontrolbordets tromleparitetsfejllampe. Flip-flop'en tilbagesættes med signalet fra TKT = 41. Det bemærkes, at det første læste ord ofte vil give anledning til en tilsyneladende paritetsfejl på grund af den usynkrone indkobling. For at forhindre lampen i at blinke, når flere LK-ordrer udføres tæt efter hinanden, er der mellem flip-flop'en og lampen indskudt en tidsforsinkelse, som er væsentlig større ved tænding end ved slukning af lampen.

Engelsk version af de foregående 6 sider (danske) ikke helt så fyldestgørende som den danske.

6. Drumstore.

Main principles of control.

Transfer of information between the drumstore and the core store is divided up in a drum-synchronous serialtransfer between the drum and the buffer-register TI and a GIER-synchronous paralleltransfer between TI and the core store. The drumsynchronous transfer is performed by the drumcircuits simultaneous with the execution of instructions not concerning the drum. The corestorageadress to or from which the drumtransfer shall be done, is also calculated by the drumcircuits simultaneous with normal operations. At the moment when the drumcircuits are ready for the parallel transport the execution of simultaneous operations is interrupted for about 26 µS while the paralleltransfer to or from the core store is going on. This is done by a special microprogram which is activated by means of a special set of 8 microaddresses, MAB 1-8, and a special clockpulse, KPB. The time-interval between the 4o interruptions during a channel transfer is about 5oo µS.

Channel selection.

Selection of the channel to or from which a transfer is wanted is done by execution of the operation VK by which the channel number modulo 512 is transferred to the register TK. Any channel-transferoperation is normally executed on condition that an existing channel has been selected. If a transfer to a nonexisting channel is executed (no. 32o-511 or 832 - 1o23) the drumcircuits will be occupied the normal time (about 21 ms). After this the situation is unchanged in the store. If a transfer from a nonexisting channel is executed the corresponding cells in the core-store will be set to zero and the computer will not finish the LK-ope-ration untill the pushbutton "annul. of the TR-paritet" is activated.

The 32o channels in the drumstore are mechanically represented by 32o read-writeheads, which are individually wired to 4o plugs (A2-A11, B2-B11, C2-C11 and D2-D11), but electrically they are separated in 2o groups each containing 16 channels. The read-write heads are decoded from the TK-register. Bits 1-5 (numbers according to the buswire no.) are decoded to an X-value: 1 out of 2o possible (12 are not used) and bits 6-9 are decoded to an Y-value: 1 out of 16 possible. These X- and

Y-values are defining the selected track, and this last part of the decoding is performed by means of the diodes placed in the plugs sitting upon the drum. This part of the decoding in only active during the execution of the operations LK or SK.

Changing of the contents of the TK-register during a channel-transfer is impossible due to the signal "block Gm TK" from card 2o5-4.

Locking for writing.

Some of the drumtracks may be locked for writing. The locking can be done in two levels. The first level comprises normally track no. o-31.. This lock is manually operated and is accessible to the user. It is possible to expand this locking to comprise up to 5 groups of 16 tracks by connecting the X-group in the decoding to one of the spare-inputs upon card 2oo-4. For instance a connection between the pins C3-2o-15 and C5-21-12 will expand the lockingarea to tracks o-47.

The second level of locking comprises normally only track no. 0, and is not accessible to the user. Unlocking can be done by removing the short circuit pin upon card 2oo-4. This locking may also be expanded so that it comprises up to 16 tracks, no. o-15, by connecting the appropriate Y-group in the decoding to C3-24-1N.

The execution of an SK-instruction where the selected track has been locked will be finished without writing during 9 µsec. for the basic-operation plus the normal executiontime for the modifications.

Clocktracks.

The drum is equipped with 3 clocktracks and associated readamplifiers. Clocktrack no. I contains one mark for detecting word no. 0, track no. II a marking for each of the 4o words, and track III a marking for each bit in all words.

Transfers to and from the drum.

The microprograms for the druminstructions LK and SK begin with the micro•peration "Gm sæt TL" which will read the value of the signal TR" into the flip-flop TL upon card no. 266. If TL becomes 1 it means that the drumcircuits are unoccupied (TL means "Tromle ledig" or "drum ready"), and the microprogram will proceed with starting the drumcircuits by means of the microoperation "Gm start TR", which will set one of the flip-flops upon the card 264 dependent on whether it is a write-or a read-operation. This flip-flop will remain set during the drumaccess and will select the correct microprogram to be executed at the interruptions when words are transferred to or from the core store. The syncronizing signal to the start-stop circuits SL ("skriv-læs" means ready for write to or read from core memory)is derived from this flip-flop and clockpulse II. The delay of 12 μsec. upon card 261 is nescessary due to the parity check (see later).

As the drum acces is initiated non-syncronous to the drum, the serial transfer of information from the drum to the TI-register may start in the middle of a word, so that the first word transferred to the corestore is not correct. The drumacces is therefore always transferring 41 words so that the first word in the acces is beeing transferred 2 times where the last one is always correct. The counting of the number of words transferred is done by means of the counting register TKT. This register is cleared (set to zero) at the beginning of a drumaccess (and when a parityfault occurs in a word). When the contents of TKT is 41, the drumacces is finished by resetting the flip-flop upon the card 264.

If a SK-instruction is initiated during the word-time of word no. 39, the 41'st counting pulse to TKT will finish the drumaccess just before the second and correct writing of word no. 39 occurs. To prevent this, an extra clearing of TKT is being executed just before word no. 0 is written the first time in the above mentioned situation.

Addresscalculation.

The resultant address of a LK or SK-instruction is transferred to the TBA-register. The TOT-register always contains the word no. of the word thas has just passed the read/writehead. The sum of TBA and TOT is calculated by means of the drumadder. This number is the corememoryaddress to where the word from the drum shall be transferred at the storing-interruption during execution of a LK-instruction. In case of the SK-instruction this sum from the drumadder has to be increased by one to give the address in the corememory wherefrom to fetch the word that shall be written upon the drum. This is done by setting the carryinput of the lowest position of the adder to the value 1. When word no. 0 is to be transferred the contents of TOT must be -1 this value is set into TOT during wordtime 39.

The contents of register TBA cannot be seen from the display in the operators panel, but by means of a DM 160 lampcard placed in A1-23.

During the B-microprograms which executes the transfers between the corestore and the drumstore the output from the drumadder is transferred to the TA-register and the inputs to the addressdecoding of the core store are connected to TA instead of AD1. This shift of them decoding is done by means of a flip-flop upon the card 266.

Wordtransfer.

The serialtransfer between the drum and the bufferregister TI is performed one bit at a time, the contents of TI beeing shifted one position to the left for every bittime. During writing upon the drum the signal for controlling the write amplifier is taken from TI-position 0 while during reading the output from the readamplifier is connected to TI-position 41. The shiftpulse for TI is derived from clockpulse III and II, the shifts being performed at the times where the value of clockpulse III is changing from 1 to 0 and from 0 to 1 and where clock-pulse II changes from 1 to 0. The principle of writing that is used is called NRZ, non-return-to-zero, because the current in the writehead is always running one or the other way. It is shifting at the beginning of words, at every bit = 1 in the words and after the finish of a word if the number of 1's was even.

The signal from the read amplifier is setting a flip-flop which again steers another flip-flop strobed by a signal derived from the clock-pulses. After this the shifting begins in a flip-flop called TI-pos.42. The last bit that is read in a word-time is the paritybit, which remains in TI-pos. 42 during the succeeding paralleltransfer to the corestore. At the shifting-in into TI of the next word from the drum, the proceeding word is shifted out through TI-0 and is lost.

Paritycontrol.

The paritycheck at reading claims that every word including paritybit contains an odd number of ones. The "ones"are counted by means of a flip-flop upon card 263. At the end of a word-time this flip-flop must contain a 0 indicating correct parity , at the beginning it contains 1. If this is not so the signal SL will via the logik cause a resetting of register TKT and the transfer will start from the beginning. If the fault continues the tracktransfer will never finish, unless the operator cancel the paritycheck by means of the switch "Annul.tr.paritet" (The red lamp will light when the check is inactive). Operating the "Reset"-button will as usual stop every action.

Simultaneously with the resetting of TKT because of parityfault another flip-flop upon the card 263 will be set, and later it will be reset when TKT = 41. This flip-flop will light the lamp at the operatorspanel called "Tromlefejl" indicating error in the drum. Because of the non-syncronous start of reading from the drum, the first word read is often with parityfault. To prevent the lamp from lighting for this reason, there is a delay between the flip-flop and the lamp.

Ved skrivning skal transport af et ord foregå før skrivning, i modsætning til læsning. hvor transporten foregår efter læsningen. TOT tilføres derfor en mente i sidste pos. under skrivning. For at kunne transportere ord nr. 0 stilles TOT på ÷1 på forkanten af KP I. Hvis indkoblingen sker som vist på tegningen, vil ord nr. 0 ikke blive transporteret, og operationen ville blive afsluttet netop som ord nr. 0 skulle skrives. For at hindre dette nulstilles TKT ved indkobling af skrivning under $KP\,I_h \times KP\,II_h$

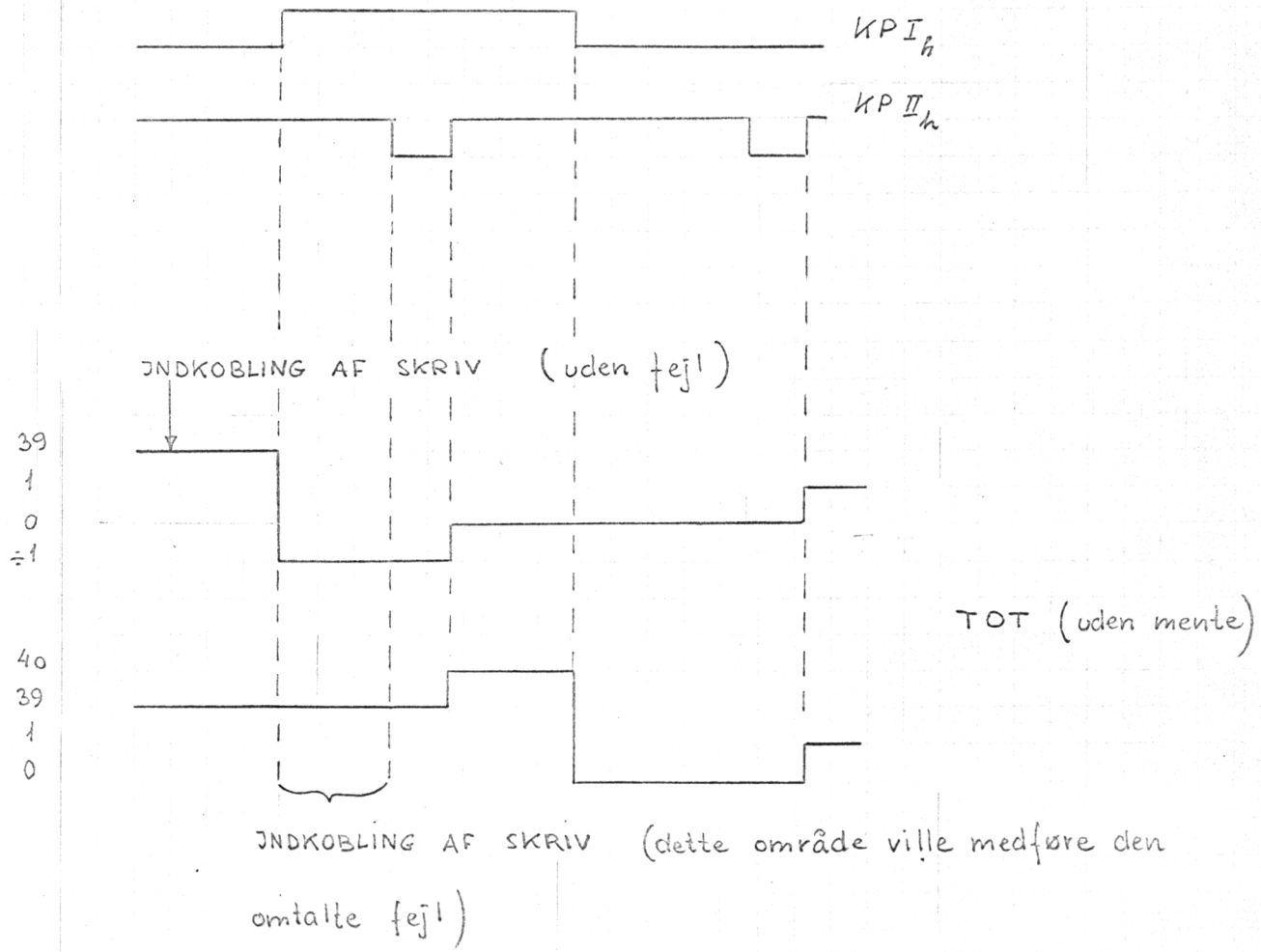

ved indkobling under KDI vil den gå galt da den ikke kan sætte ÷1 i tåt da det kræver betingelsen SK og den hovesikke ligefor indkobling

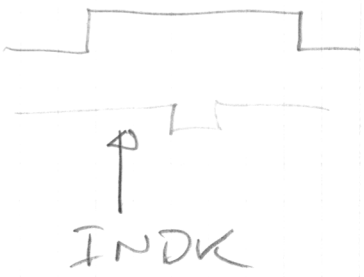

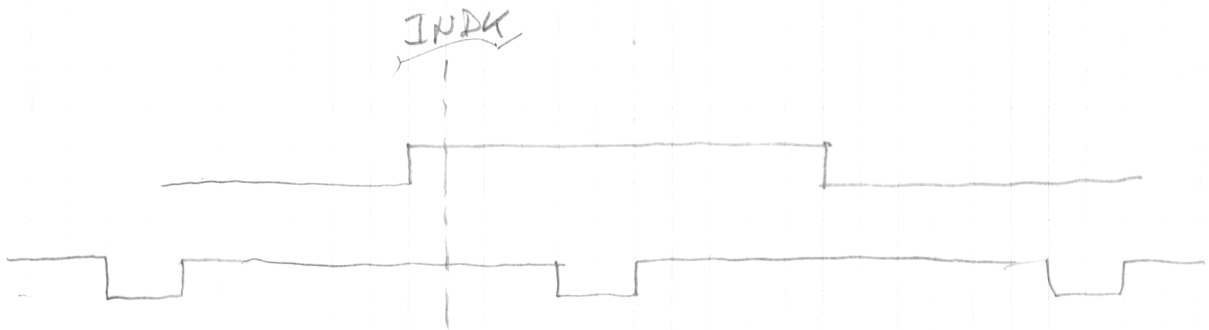

TOT	39	39	40	0
M	+1		+1	+1
ADDER	39	40	41	+1

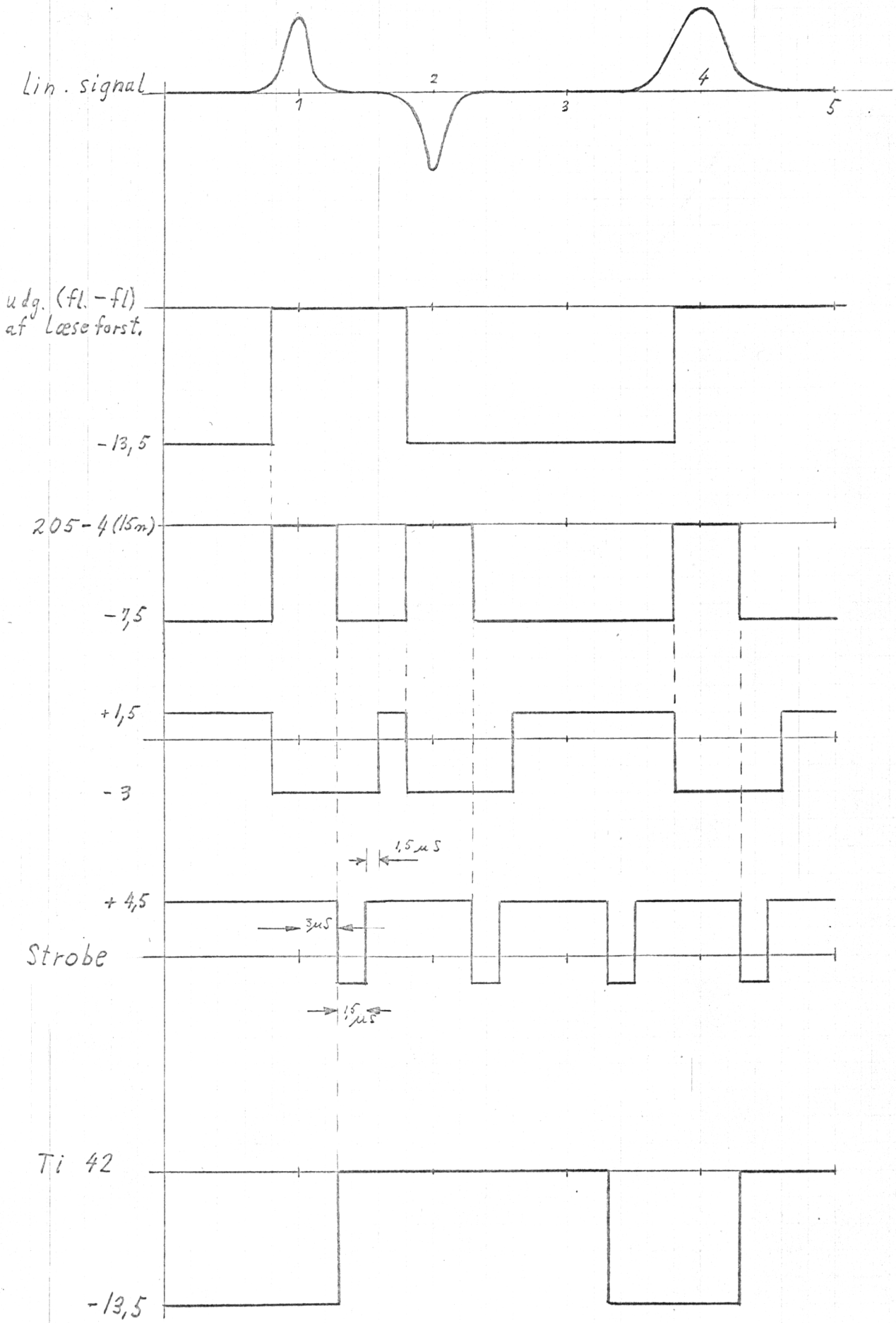
Lin. signal
1
2
3
4
5
udg. (fl. – fl)
af Læse forst.
-13,5
205-4 (15m)
-7,5
+1,5
-3
1,5 µS
+4,5
3µS
Strobe
1,5 µS
Ti 42
-13,5

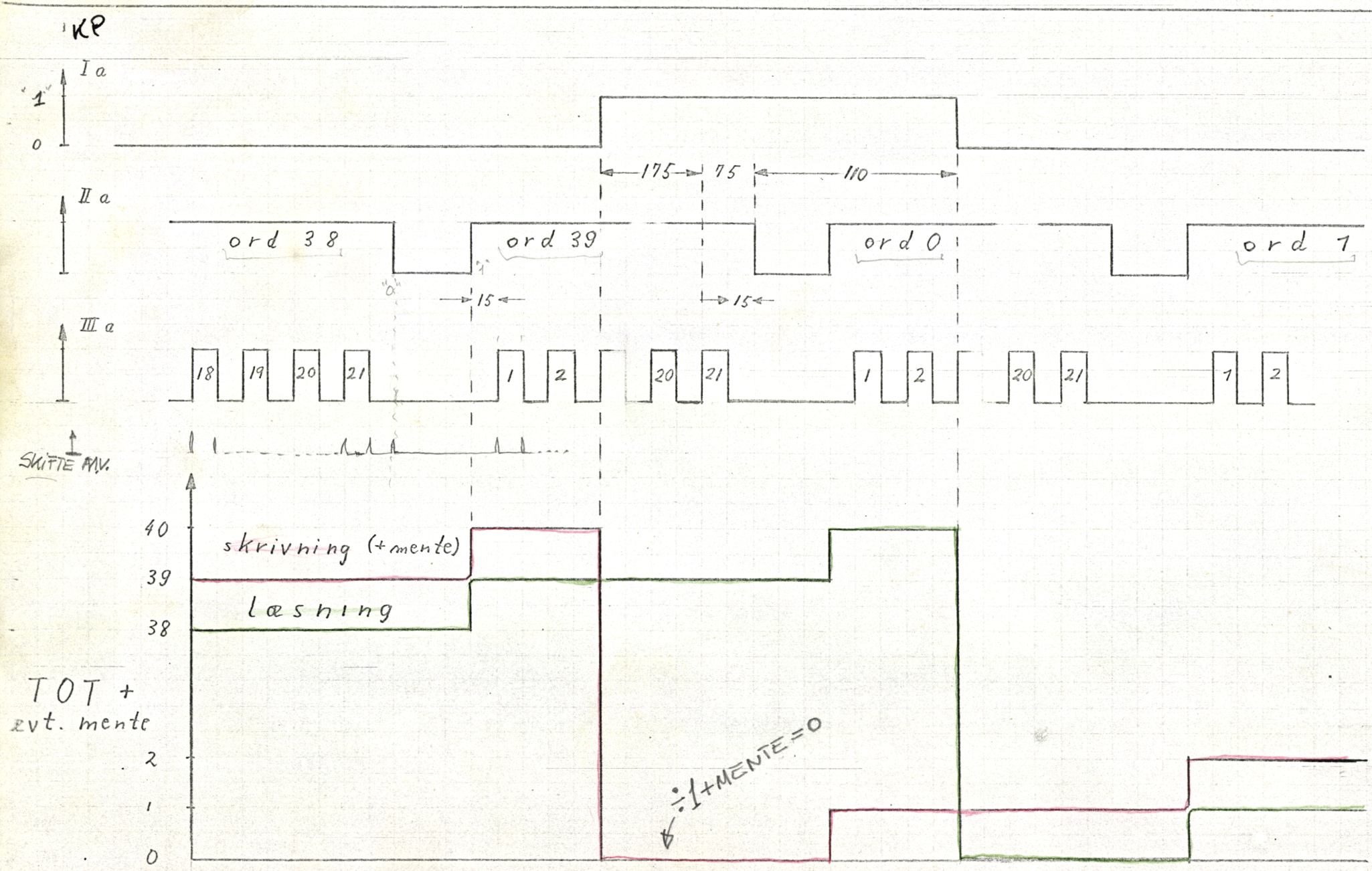

tromle klokimpulser

19

EKH

Til den anden tegn 0257-1

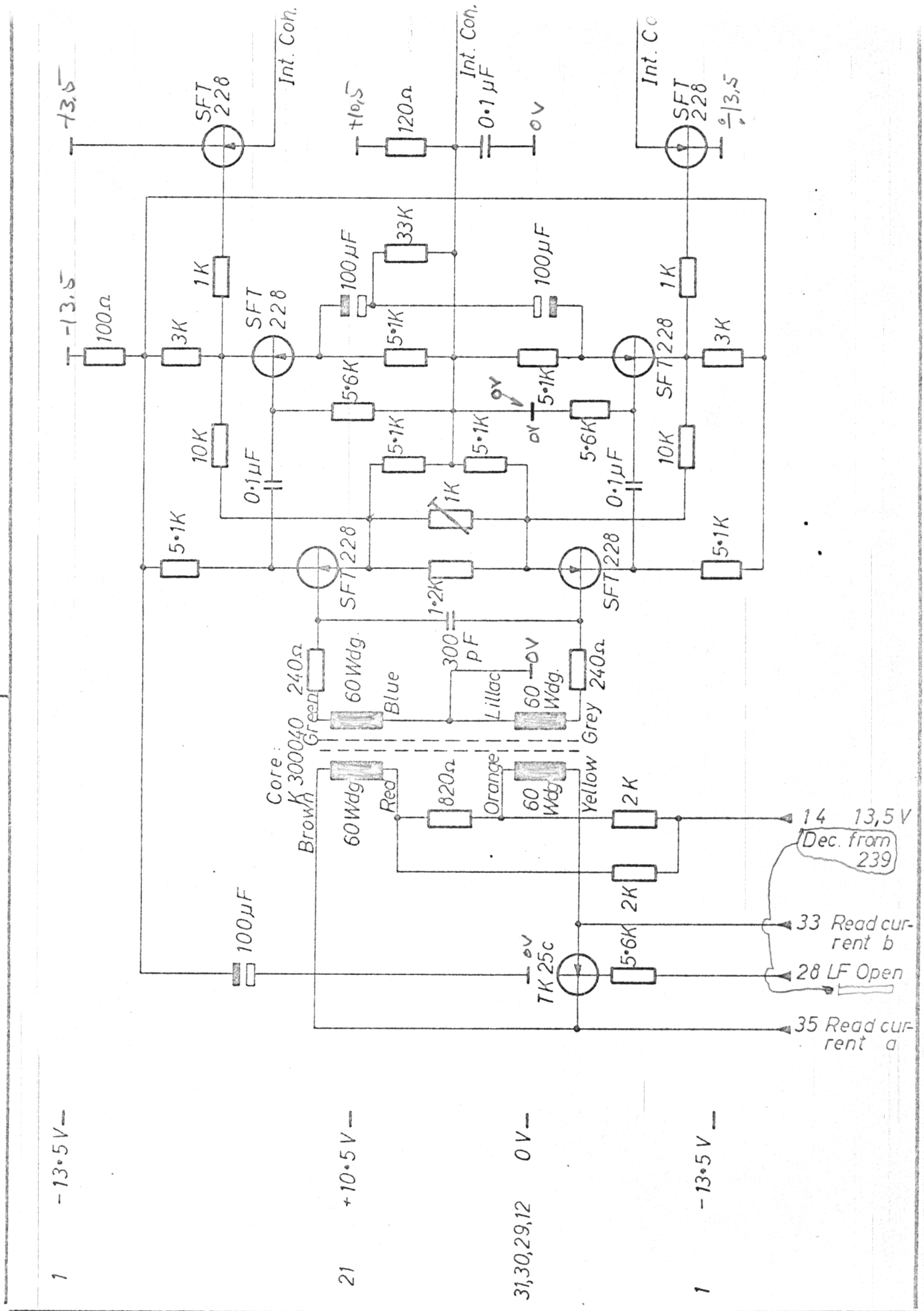

Unit: GIER 6	Designed H. I.	DRUM SIGNAL AMPLIFIER	Drawing No
			Drawn by B.R. 23. 9. 66.
REGNE CENTRALEN	Approved		Checked F.E. 22-2-67
	Checked 1. 2. 62		2 Sheets / Sheet 1
	Last Revision		Pos. C5 - 25 / 0257-1

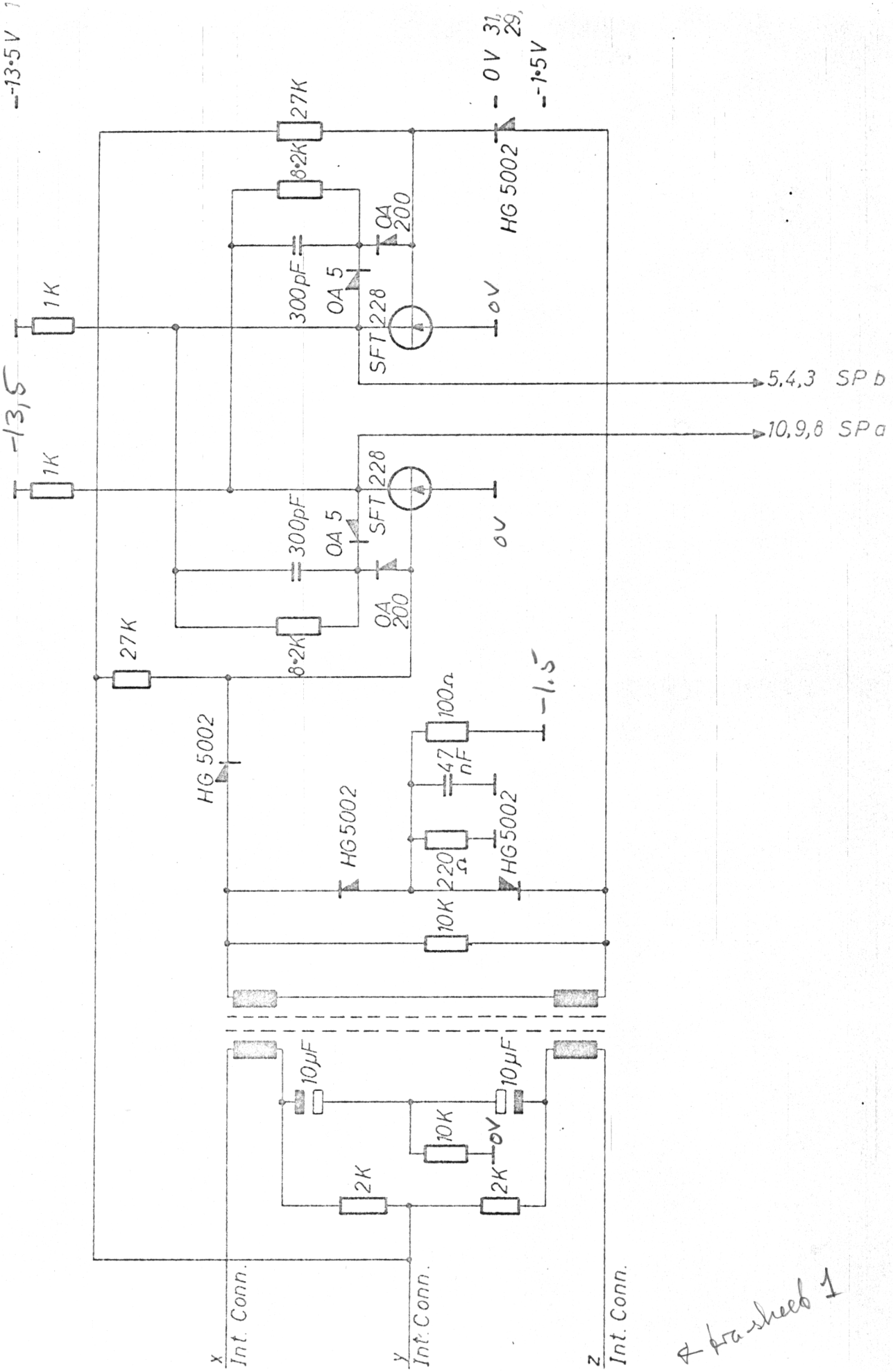

& tra-sheet 1

Unit: GIER 6	Designed H I	DRUM SIGNAL AMPLIFIER	Drawing No
BOONE CENTRALEN	Approved		Drawn by B.R. 22. 9. 66
	Checked I. 2. 67.		Checked F.E. 22-2-67
			2 Sheets / Sheet 2
			0257-1

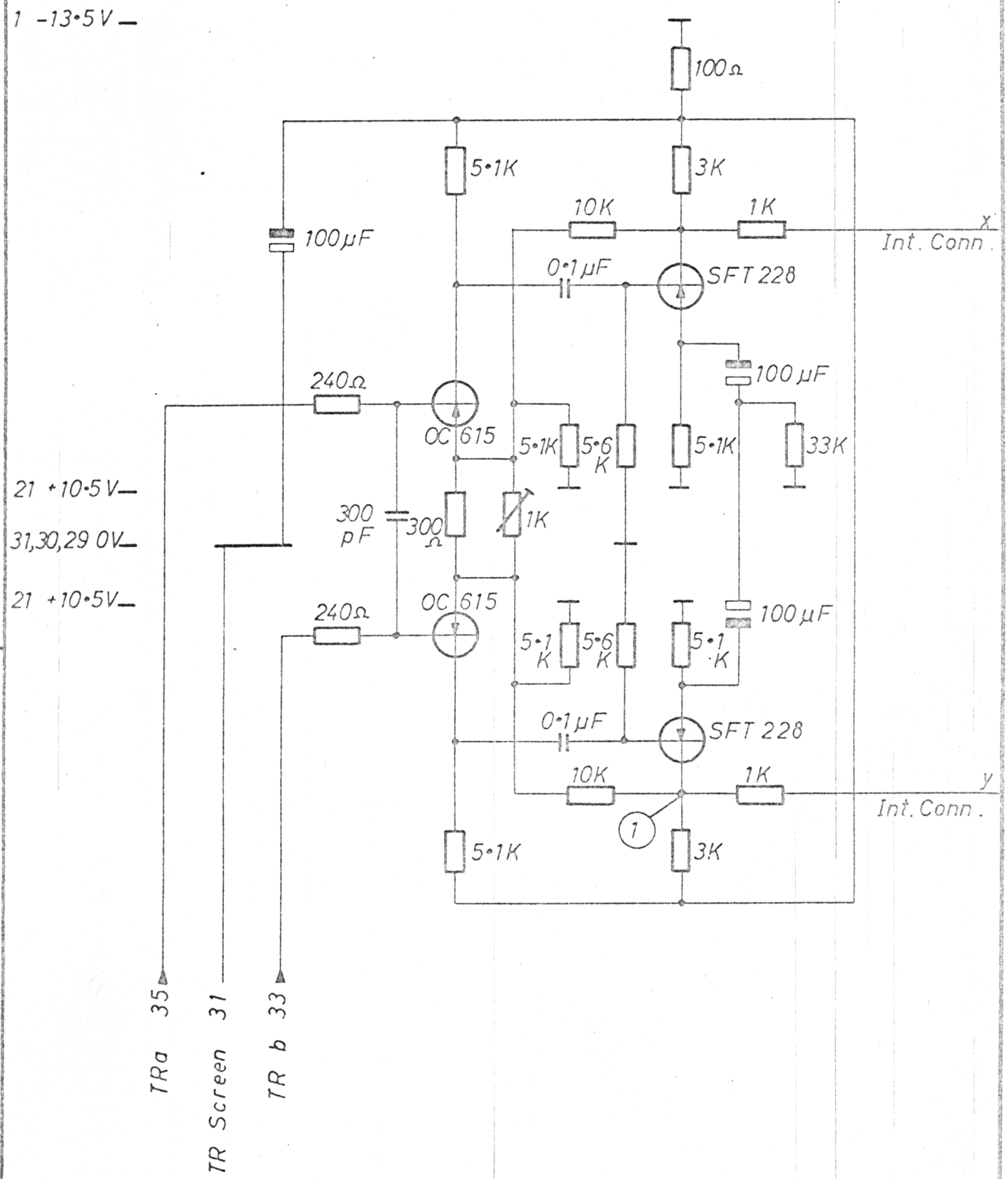

Unit: GIER 6	Designed H. I.	DRUM CLOCK PULSE AMPLIFIER	Drawing No
A/S REGNE	Approved		Drawn by B. R. 23. 8. 66
	Checked 1. 2. 62.		Checked F. E. 22-2-67
			2 Sheets Sheet 2

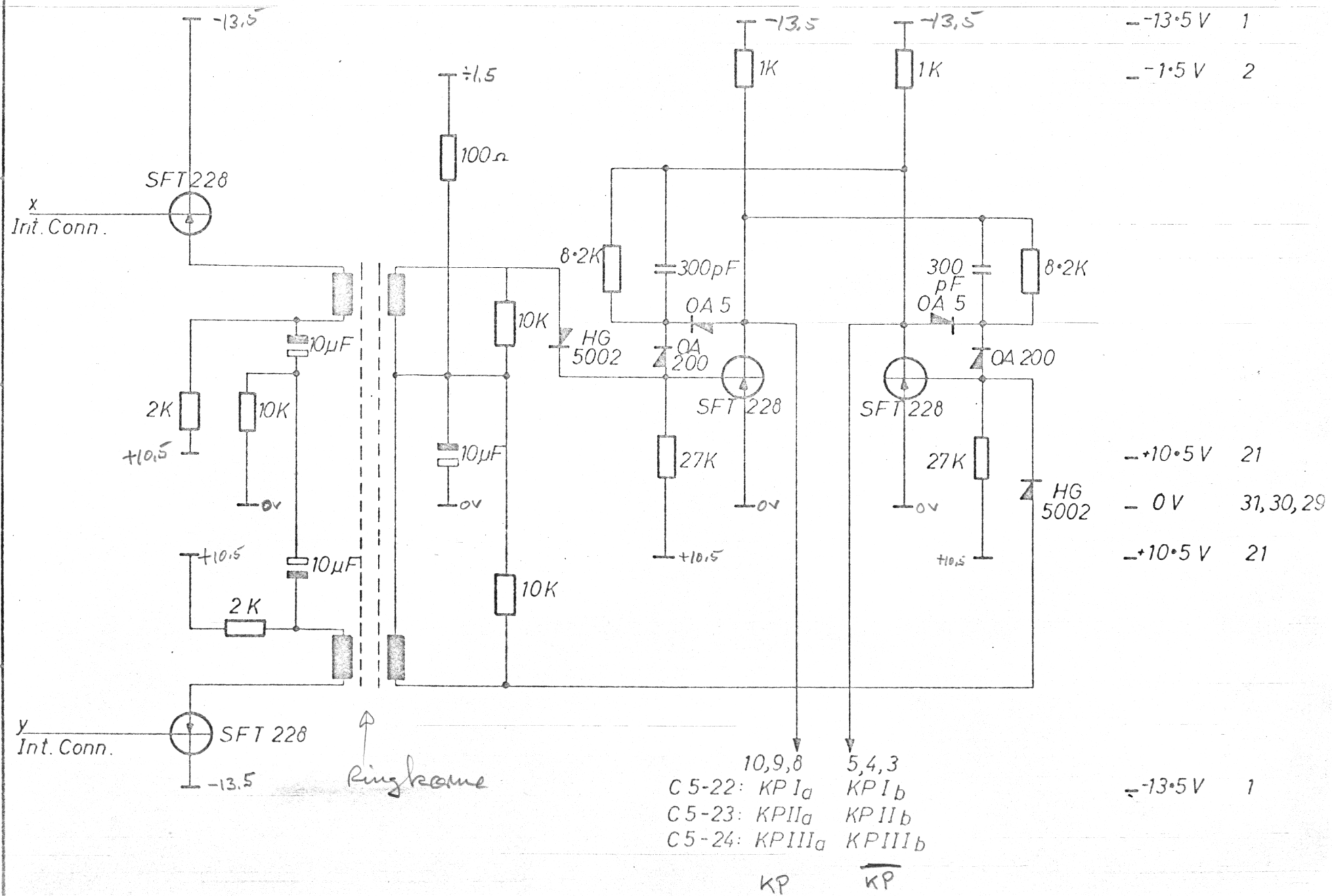

CENTRALEN

Unit: GIER 6

Designed H. I.

Approved

Checked 1. 2. 62.

Last Revision

DRUM CLOCK PULSE AMPLIFIER

Drawing No

Drawn by B. R. 23. 8. 66

Checked F. E. 22-2-67

2 Sheets Sheet 1

257

95 3/4 (9,00)

Drum coil



÷1.5

nördene ~~Ø~~ bliver ÷1,5 vil der kane

et stort spændingsstad på

denne som opsuges af de 2(3) ovenfor

der kaner da da

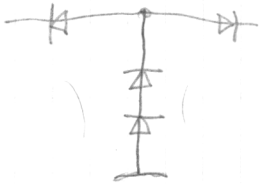

÷13

Coil

0

Ø 4

5-1

0248 8 half-circuits per Card

0248-1 2x4 half-circuits per Card

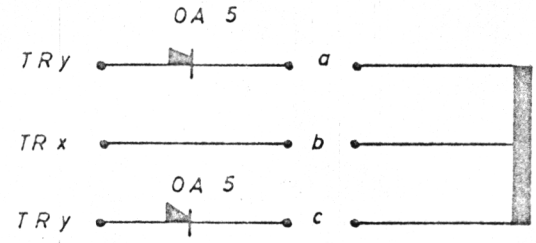

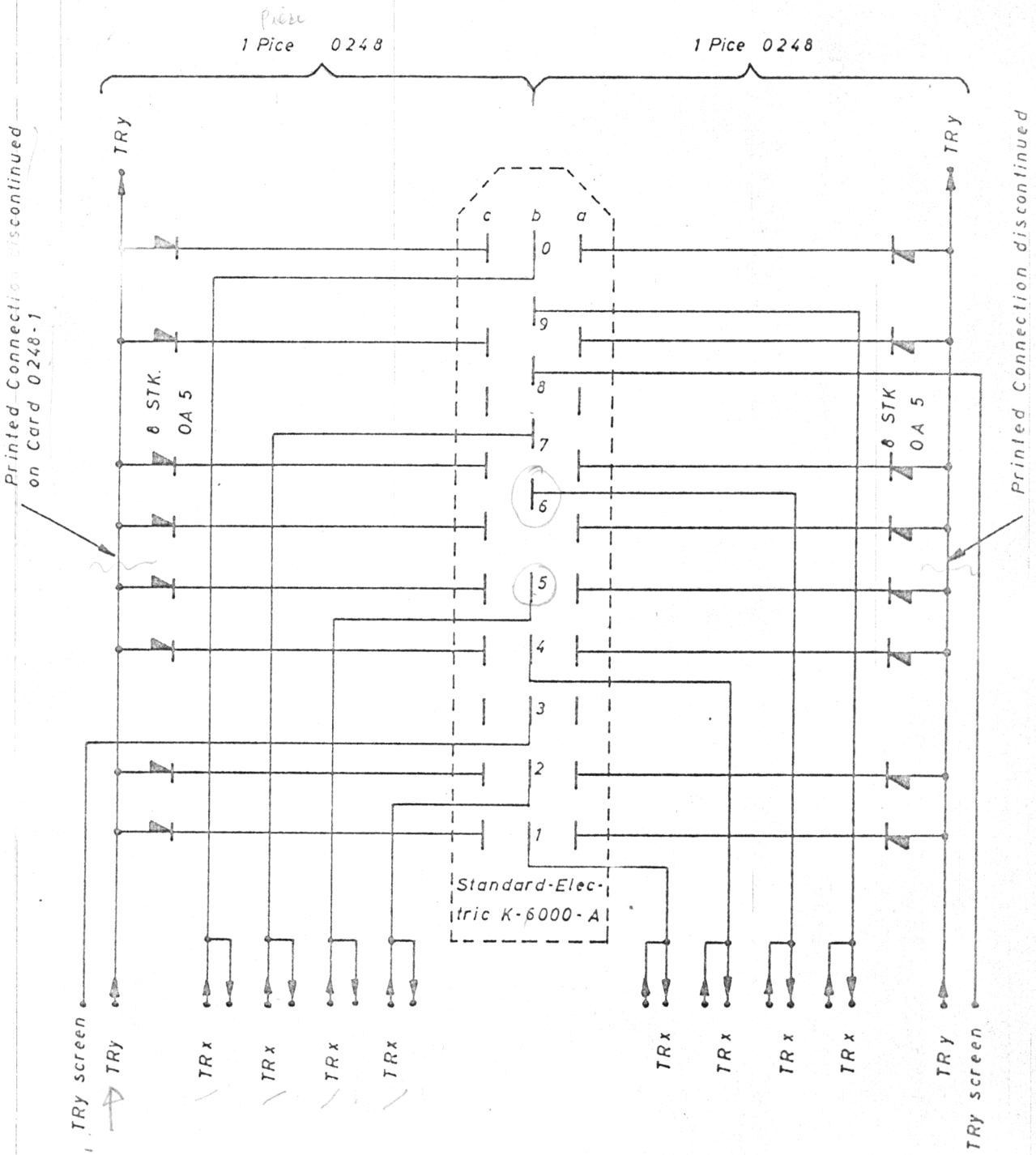

Unit: GIER 6	Designed H.I.	Diodelogik, TR.	Drawing No
			Drawn by R.N. 11.1.67.
	Approved		Checked F.E. 23-2-67
BEGNE CENTRALEN	Checked 1.2.62.		3 Sheets / Sheet 1
	Last Revision		0248

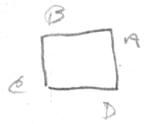

	Column D	Column A	Column B	Column C
1	0248-2 diode →		→	→
2	0248	0248	0248	0248
3	0248-1	0248	0248-1	0248
4	0248	0248	0248	0248
5	0248	0248-1	0248	0248-1
6	0248	0248	0248	0248
7	0248	0248	0248	0248
8	0248-1	0248	0248-1	0248
9	0248	0248	0248	0248
10	0248	0248-1	0248	0248-1
11	0248	0248	0248	0248

2 Cards for each plug

The clock pulses are transferred from D1 (or possibly from A1, B1, or C1) via Cards 0248-2, which do not contain Diodes, but are Connected according to the following Diagram.

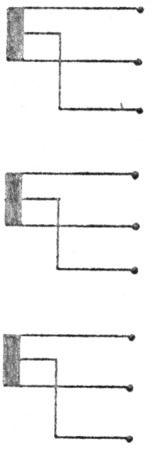

TR	Ia	5b
TR	Ib	2b
TR	I screen	5c
TR	IIa	0b
TR	IIb	7b
TR	II screen	0c
TR	IIIa	1a
TR	IIIb	1c
TR	III screen	1b

Unit: GIER 6	Designed H.I.	Drum Plug Distribution	Drawing No
BOONE CENTRALEN	Approved		Drawn by R.N. 2.1.67
	Checked 1.2.62		Checked F.E. 25-2-67
	Unit Revision		3 Sheets / Sheet 2

16·20
3202

19·15
1954
180
2 4 5

Associated track numbers and locations: Ex. Track no. 197: (X,Y)= (12.5). Location: Plug 69-5

X \ Y	0	1	2	3	4	5	6	7	8	9	10	11	12	13	14	15
0	A2-0	A3-1	A4-0	A6-1	A7-0	A8-1	A9-0	A11-1	C2-0	C3-1	C4-0	C6-1	C7-0	C8-1	C9-0	C11-1
1	A2-9	A3-2	A4-9	A6-2	A7-9	A8-2	A9-9	A11-2	C2-9	C3-2	C4-9	C6-2	C7-9	C8-2	C9-9	C11-2
2	A2-7	A3-4	A4-7	A6-4	A7-7	A8-4	A9-7	A11-4	C2-7	C3-4	C4-7	C6-4	C7-7	C8-4	C9-7	C11-4
3	A2-6	A3-5	A4-6	A6-5	A7-6	A8-5	A9-6	A11-5	C2-6	C3-5	C4-6	C6-5	C7-6	C8-5	C9-6	C11-5
4	A2-5	A3-6	A4-5	A6-6	A7-5	A8-6	A9-5	A11-6	C2-5	C3-6	C4-5	C6-6	C7-5	C8-6	C9-5	C11-6
5	A2-4	A3-7	A4-4	A6-7	A7-4	A8-7	A9-4	A11-7	C2-4	C3-7	C4-4	C6-7	C7-4	C8-7	C9-4	C11-7
6	A2-2	A3-9	A4-2	A6-9	A7-2	A8-9	A9-2	A11-9	C2-2	C3-9	C4-2	C6-9	C7-2	C8-9	C9-2	C11-9
7	A2-1	A3-0	A4-1	A6-0	A7-1	A8-0	A9-1	A11-0	C2-1	C3-0	C4-1	C6-0	C7-1	C8-0	C9-1	C11-0
8	D2-1	D4-0	D5-1	D6-0	D7-1	D9-0	D10-1	D11-0	B2-1	B4-0	B5-1	B6-0	B7-1	B9-0	B10-1	B11-0
9	D2-2	D4-9	D5-2	D6-9	D7-2	D9-9	D10-2	D11-9	B2-2	B4-9	B5-2	B6-9	B7-2	B9-9	B10-2	B11-9
10	D2-4	D4-7	D5-4	D6-7	D7-4	D9-7	D10-4	D11-7	B2-4	B4-7	B5-4	B6-7	B7-4	B9-7	B10-4	B11-7
11	D2-5	D4-6	D5-5	D6-6	D7-5	D9-6	D10-5	D11-6	B2-5	B4-6	B5-5	B6-6	B7-5	B9-6	B10-5	B11-6
12	D2-6	D4-5	D5-6	D6-5	D7-6	D9-5	D10-6	D11-5	B2-6	B4-5	B5-6	B6-5	B7-6	B9-5	B10-6	B11-5
13	D2-7	D4-4	D5-7	D6-4	D7-7	D9-4	D10-7	D11-4	B2-7	B4-4	B5-7	B6-4	B7-7	B9-4	B10-7	B11-4
14	D2-9	D4-2	D5-9	D6-2	D7-9	D9-2	D10-9	D11-2	B2-9	B4-2	B5-9	B6-2	B7-9	B9-2	B10-9	B11-2
15	D2-0	D4-1	D5-0	D6-1	D7-0	D9-1	D10-0	D11-1	B2-0	B4-1	B5-0	B6-1	B7-0	B9-1	B10-0	B11-1
16	D3-0	D3-5	A5-1	A5-6	D8-0	D8-5	A10-1	A10-6	B3-0	B3-5	C5-1	C5-6	B8-0	B8-5	C10-1	C10-6
17	D3-9	D3-4	A5-2	A5-7	D8-9	D8-4	A10-2	A10-7	B3-9	B3-4	C5-2	C5-7	B8-9	B8-4	C10-2	C10-7
18	D3-7	D3-2	A5-4	A5-9	D8-7	D8-2	A10-4	A10-9	B3-7	B3-2	C5-4	C5-9	B8-7	B8-2	C10-4	C10-9
19	D3-6	D3-1	A5-5	A5-0	D8-6	D8-1	A10-5	A10-0	B3-6	B3-1	C5-5	C5-0	B8-6	B8-1	C10-5	C10-0

Drum Tracks 0-319 are represented by bit 1-9, which are decoded in x (bit 1-5), and y (bit 6-9).

kan 60
X = 3 } C7-6
Y = 12
3,13 = C8-5
22
16
8
50 KAN 61

TK: 16 8 4 2 1 8 4 2 1

0	1	2	3	4	5	6	7	8	9

X Y

Unit: GIER E
Designed: M.I
Approved:
Checked: 1.2.62
Numbering and Location of Drum Tracks
Drawing No:
Drawn by: R.N. 3.2.62
Checked: F.E. 20-2-67
3 Sheets
Sheet 3

CENTRALEN BOGNE

16/11 1965

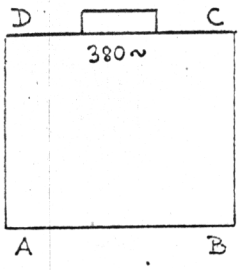

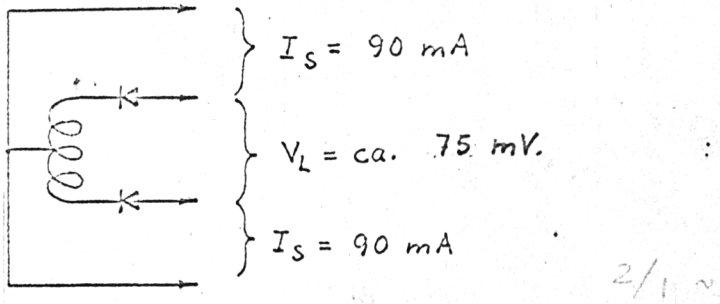

2/1 ~ plug 2 pin 1a-b-c

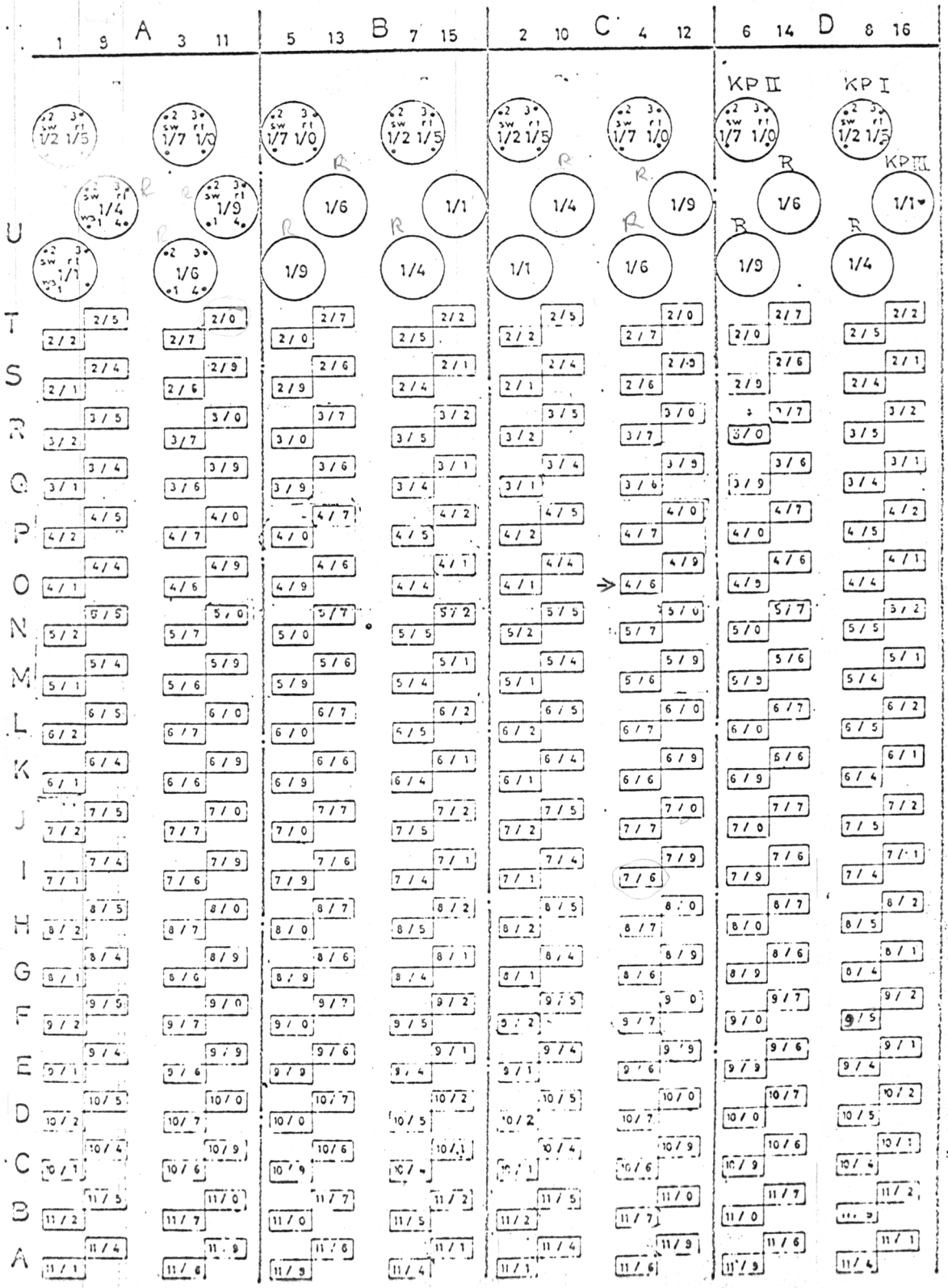

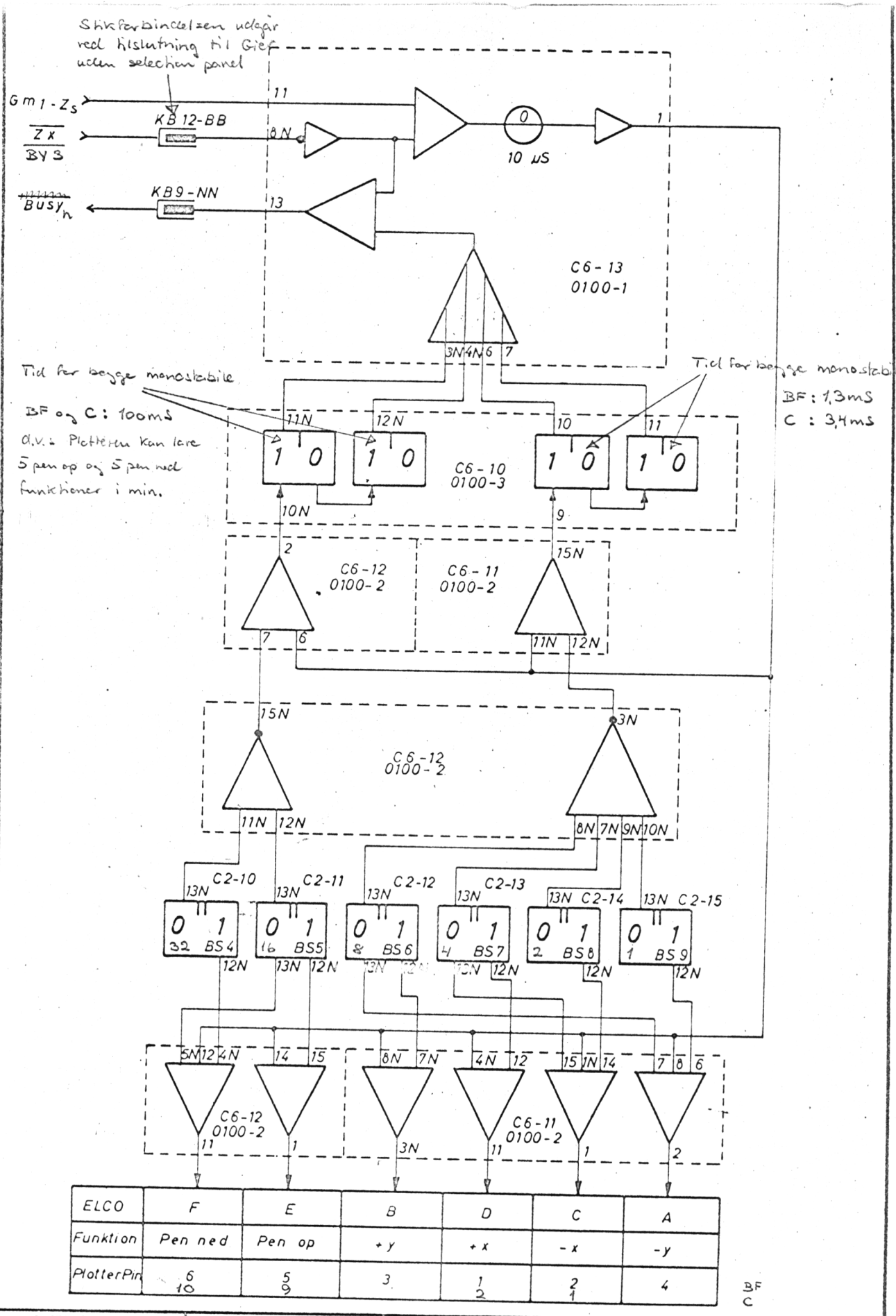

Unit: GIER/PLOTTER	Designed H. I.	GIER PLOTTER CONNECTION FOR BENZON - FRANCE OG CALCOMP	Drawing No
BBGNB CENTRALEN	Approved		Drawn by R.N 28.11.66
	Checked 1.9.64. P.T.N.		Checked F.E. 29-11-66
	Last Revision		1 Sheets / Sheet 1

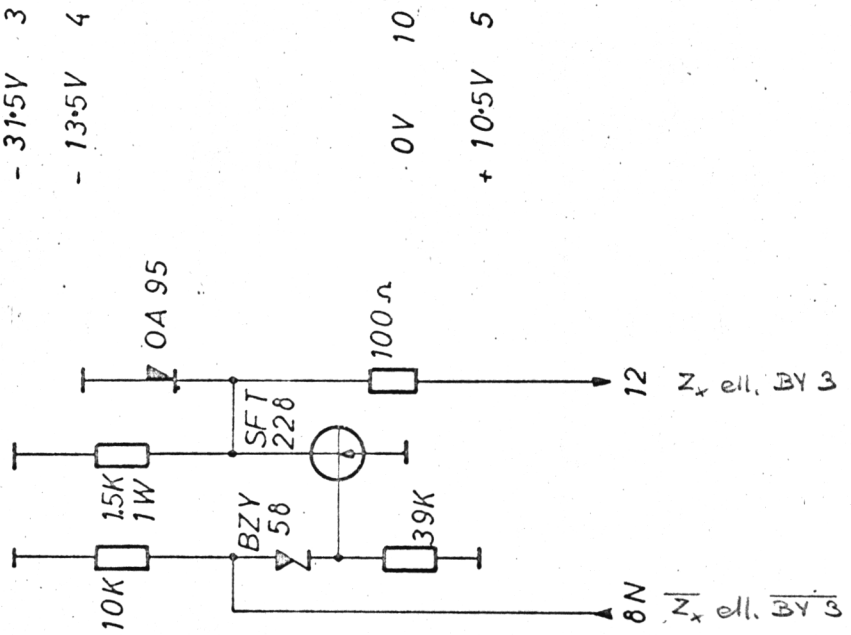

Unit GIER/PLOTTER	Designed H. I.	GATE MED INVERTER	Drawing No
	Approved		Drawn by R.N. 24.11.66.
REGNE CENTRALEN	Checked 16. 5. 66.		Checked F.E. 29-11-66
	Last Revision		2 Sheets / Sheet 2
			C6-13 / 0100-1

Unit GIER/PLOTTER	
REGNECENTRALEN	
Designed H.I.	
Approved	
Checked 7.9.64.	
Last Revision 16.5.65.	
LOGIK	
Drawing No	
Drawn by R.N. 24.11.66.	
Checked F.E. 29-11-66	
2 Sheets Sheet 1	
C6-13 0100-1	

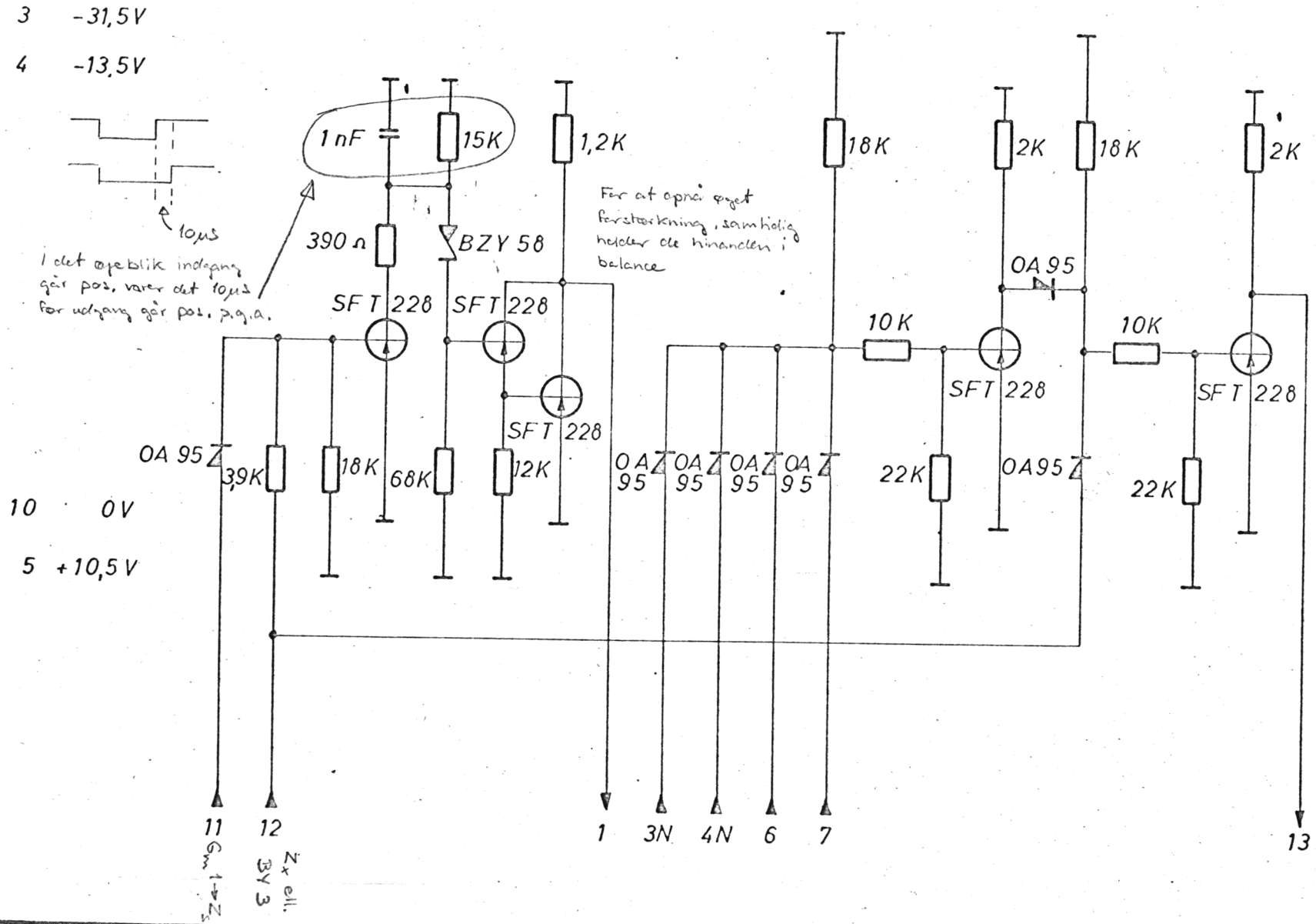

2 STK pr. Plade

3 -13,5

2 monostabile i stedet for 1 sålades at den første kan nå at falde til ro for at være klar til at blive sat igen medens den anden melder Busy

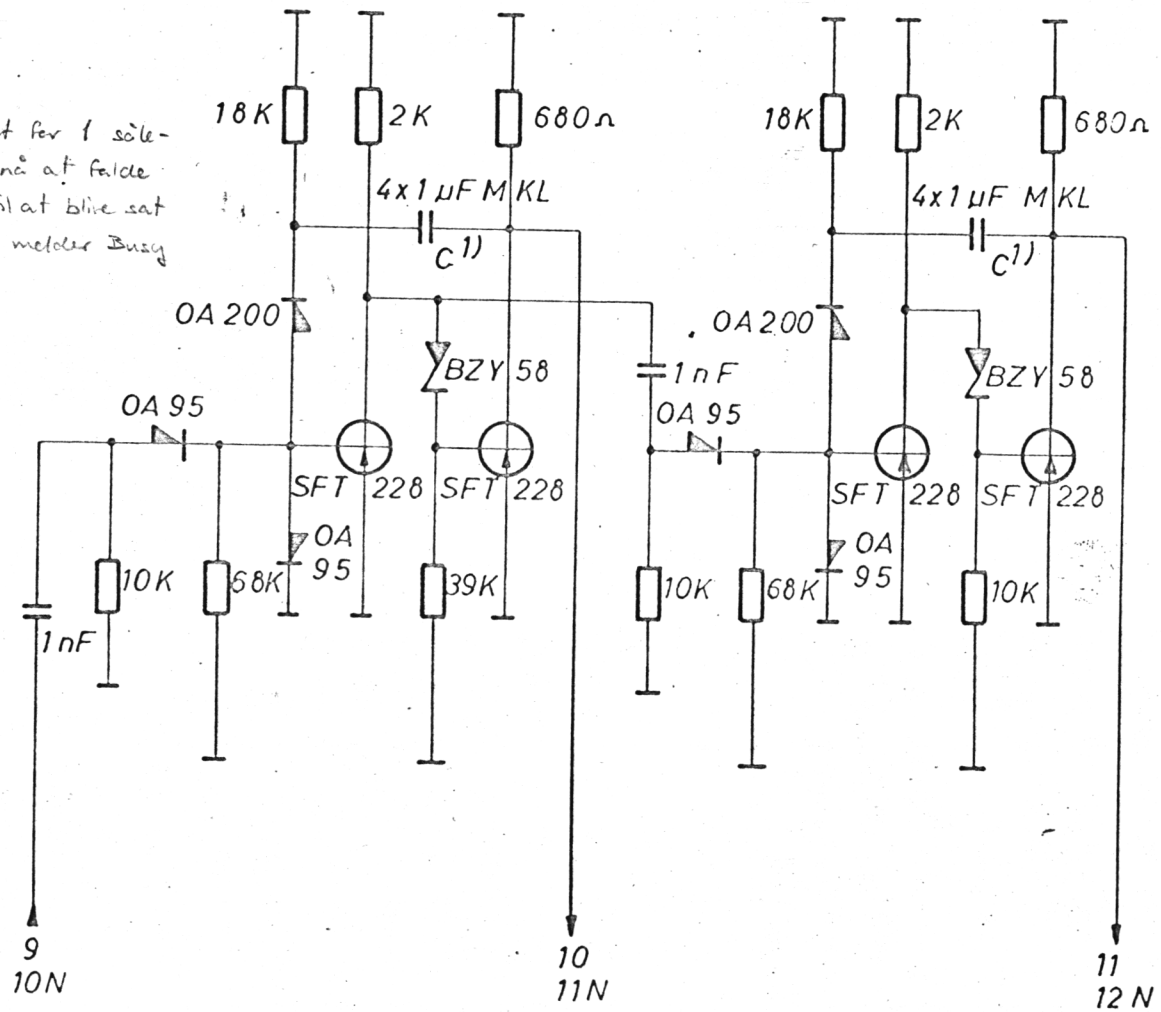

5 0 V

12 -3 V

4 + 10,5 V

Calcomp 1) Ved udgang 10 og 11 er C = ~~1 x 0,22 µF~~ 129 nF 1% (82 nF parallelt med 47 nF) ~ 3 cm/sek

Benzon France — " — C = 47 nF 1% ~ 7,7 cm/sek ; 39 nF ~ 9,1 cm/sek

Unit GIER/PLOTTER

REGNE CENTRALEN

Designed H.I.

Approved

Checked 1.9.64.

Last Revision

MONOSTABIL MULTIVIBRATOR

Drawing No

Drawn by R.N. 24.11.66.

Checked F.E. 29-11-66

1 Sheets

Sheet 1

C6-10 0100-3

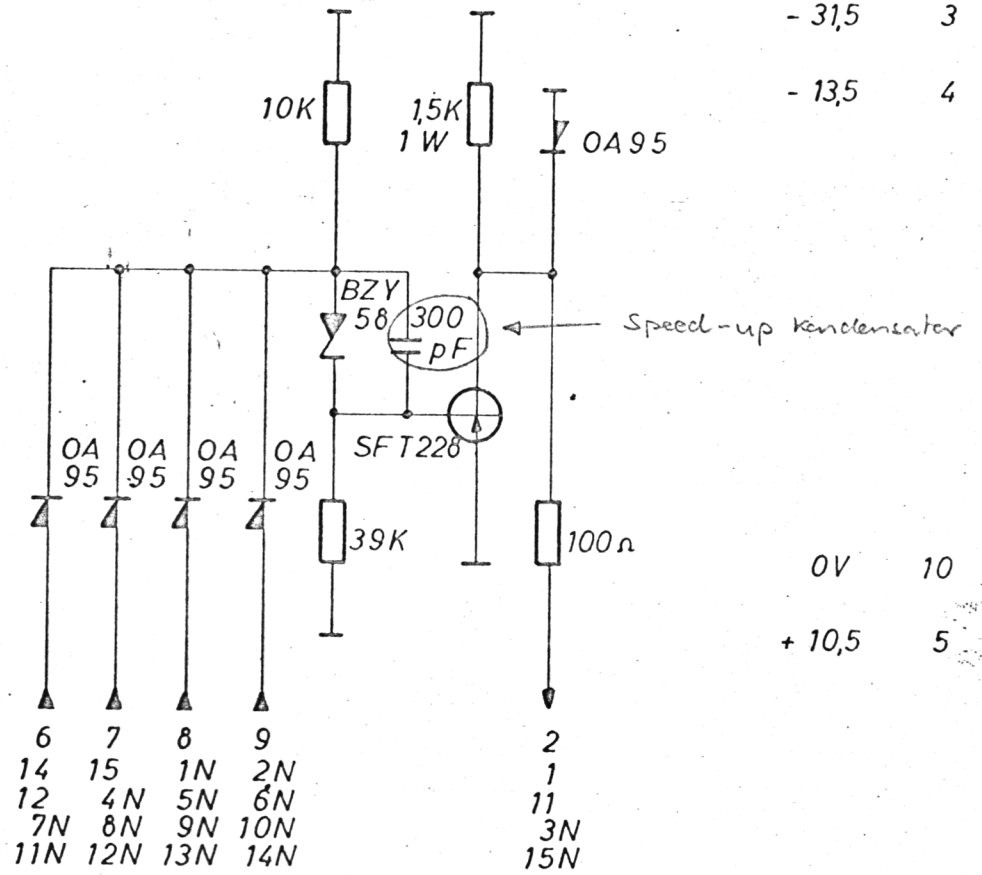

Unit GIER/PLOTTER

REGNE CENTRALEN

Designed H.I.

Approved

Checked 1. 9. 64.

Last Revision

GATE MED INVERTER

Drawing No

Drawn by R.N. 24.11.66

Checked F.E. 29-11-66

1 Sheets

Sheet 1

C6-11-12

0100-2

Contents

Foreword with Note	page 7- 1	
Contents	7- 2	
Display Panel Designations	7- 2a	
A Short Description of the Peripherals	7-11	
Peripheral Selection	7-12	
Flow Chart for the VY Operation	7-14	(11)
English Word List	7-14a	
Input via Peripheral	7-15	
Flow Chart for the LY Operation	7-17	(14)
English Word List	7-17a	
Output via Peripheral	7-18	
Flow Chart for the SY Operation	7-19	(16)
English Word List	7-19a	
Tape Reader Input	7-20	
Block Diagram for Tape Reader Input		
English Word List	7-24a	
Typewriter Input	7-25	
Correspondance between Numerical Values and Typographical Symbols	7-26	
Block diagram for Typewriter Input		
English Word List	7-29a	
Punch Output	7-30	
Block Diagram for Punch Output		
English Word List	7-32a	
Typewriter Output	7-33	
Block Diagram for Typewriter Output		
English Word List	7-35a	
Line Printer Output	7-36	
Block Diagram for Line Printer Output		
English Word List	7-37a	

1. Peripheral Unit Circuits

Note

In publishing this English version of 'Description of Peripheral Units Circuits', it has seemed advisable to include a list of the new English designations on the Display Panels and word lists for the designations employed on the various flow charts and block diagrams, retained herein with Danish text. Accordingly, a brief word list, containing the Danish terminology and English equivalents, follows each flow chart. A similar word list is given for each block diagram. These block diagrams are however inserted in Vol. I of GIER Technical Manual. The list of Display Panel designations is inserted after Contents.

The gap in page numbers between 7-2a and 7-11 is due to the fact that these pages have been inserted as chapter 2 of this volume.

20 June 1965/ HAZ.

A Short Description of the Peripherals

The GIER computer is equipped with a paper tape reader, a punch for 8-track tapes, and an input/output typewriter.

Since an LY (LY=læs ydre=read peripheral) operation and an SY (SY= skriv ydre=write peripheral) operation respectively cause the input and the output of only one character or row of holes, both input and output take place one character or row of holes at a time.

These basic peripheral devices are connected to the computer via 10-bit registers in the buffer. The typewriter is an exception to this however, since punching a key takes much longer than the time required by the computer itself to place data from the typewriter in the AC register directly from the buslines.

The registers in the buffer utilize only the 8 least significant positions (pos. 2-9), plus pos. 0 in the bl register.

The connection of the individual peripherals is controlled by the BY register.

Peripheral Selection

Selection of the peripheral device is achieved with the VY (VY=velg ydre-select peripheral) operation (OP 51). As may be seen from the flow chart for the VY operation, the modified address is placed in the BY register with the increment part of the instruction as a mask, where the postitons with one-bits in the increment part of the operation are not changed.

If the operation has no increment number, this is regarded as zero, and the entire modified address is placed in the BY register.

In the BY register, positions 3-6 are reserved for selection of output devices and positions 7-9 for selection of input devices.

Input devices are

tape reader,
typewriter, and
card reader.

Output devices are

typewriter,
punch, and
line printer.

In addition, a group of 16 buttons on the Auxiliary Display Panel makes it possible to activate one or more output devices simultaneously through manual selection. The arrangement of these manual selection buttons is shown on the next page.

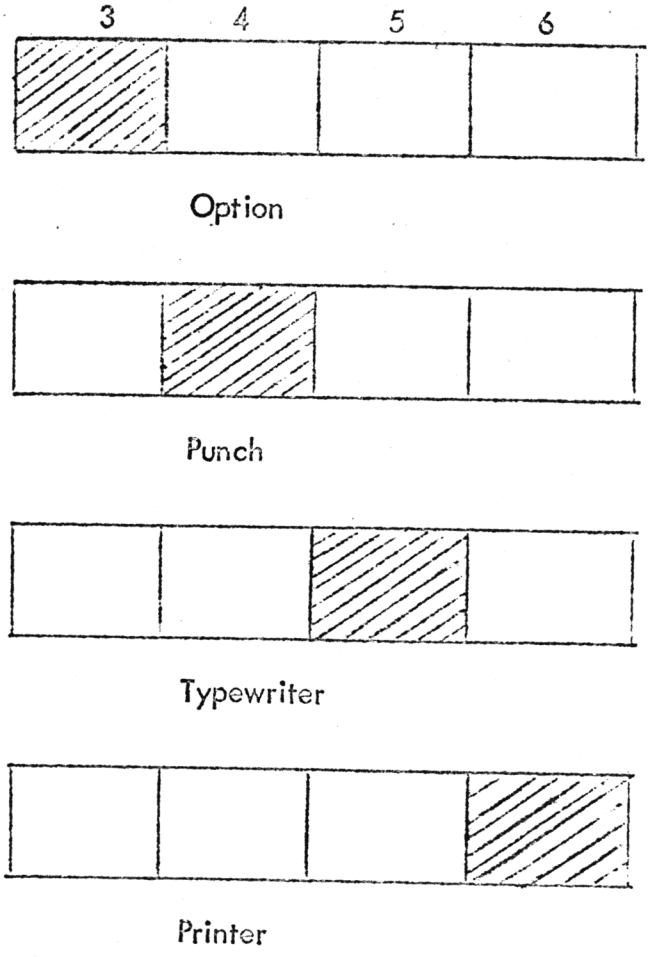

Illustration of the Arrangement of the Manual Selection Buttons on the Auxiliary Display Panel

The appropriate peripheral device(s) is selected according to which position(s) in the BY register is set and which button(s), corresponding to this position, is depressed.

VY-ordrens Flow-card

Pi - ordre

TD skrå

Flow Chart for the VY Operation

Pi - operation

TD cross

VY-ordrens Flow-card

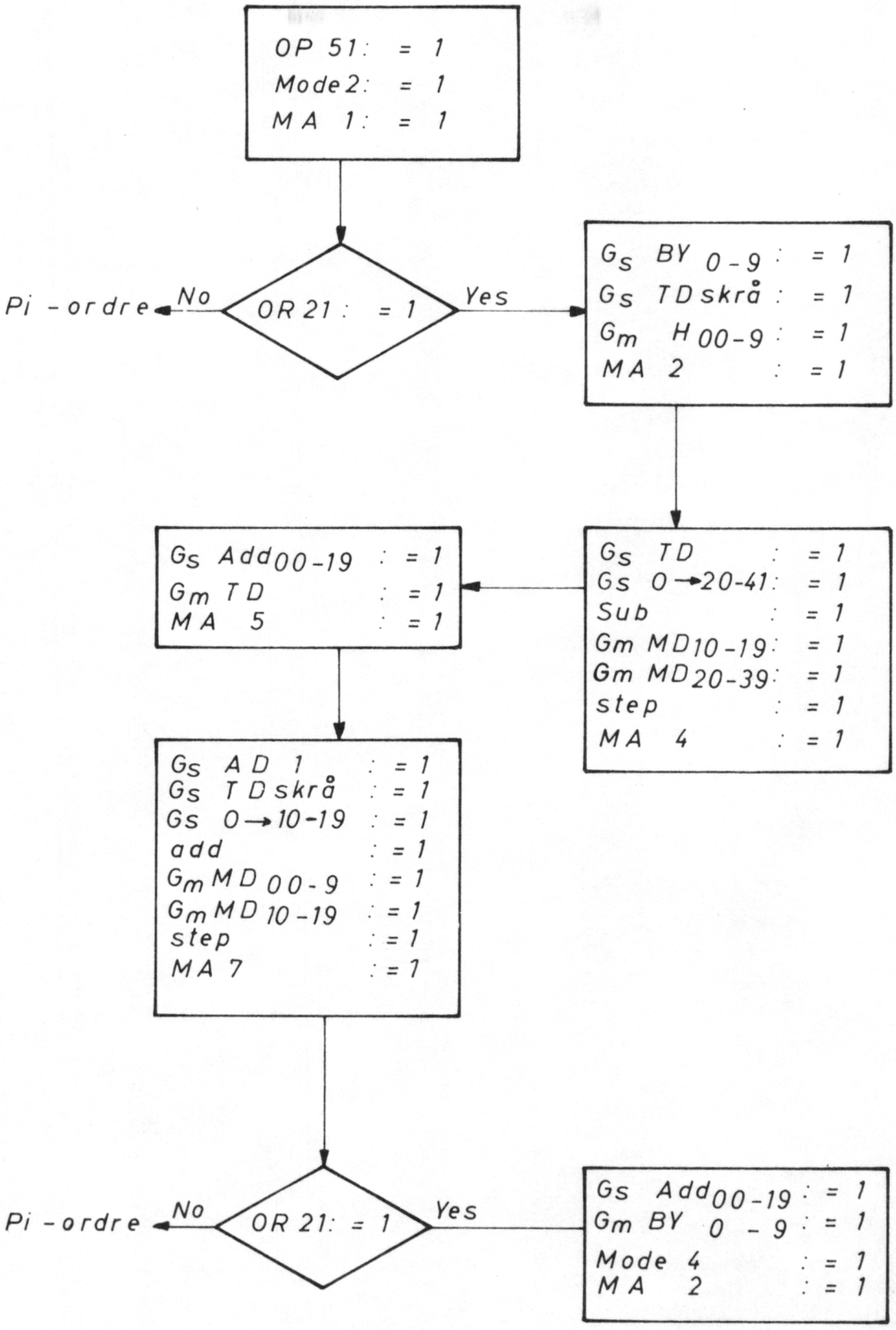

Input via Peripheral

The GIER Computer operates with a clock cycle of approximately 450 kHz (2.2μsec.), and therefore cannot be employed in direct conjunction with peripheral devices, since the latter are engaged in input/output that involves differing lengths of time, e.g.:

typewriter	ca.	100 milliseconds,
tape reader	ca.	0.5 - 2 milliseconds, or
punch	ca.	8 milliseconds.

(150 clock cycles ~ 1 char per 6.68 ms; 8 ms ~ 125 clock cycles)

Accordingly, the computer must receive indication from the peripheral that the latter is 'ready' to respond to instructions for input/output or that it is 'busy' with input/output.

A sense-busy signal, micro-operation Gmj, is therefore included in the built-in microprograms for input/output , which if the computer receives the 'busy' signal from a peripheral, causes the former to wait until the 'ready' signal, j klar, is received, which then allows the computer to proceed in the microprogram.

The LY operation (OP 59) is employed for input via peripheral to the computer. As may be seen from the flow chart for the LY operation, three conditions, are involved, viz.:

condition 1 : $BY\ 8 \cdot \overline{BY\ 9} := 1$,

condition 2 : $BY\ 8 \cdot \overline{BY\ 9} + \overline{BY\ 8} \cdot BY\ 9 := 1$, and

condition 3 : $jLY := 1$.

Condition 1 distinguishes between card reader selection or tape reader and typewriter selection.

Condition 2 distinguishes between tape reader selection or typewriter selection, so that selection is now possible among all three devices.

As may also be seen, selection is achieved via positions 7-9 of the BY register in the following fashion:

BY 8	BY 9		V.Y
0	0	tape reader selection,	0
0	1	typewriter selection,	1
1	0	card reader selection, and	2
1	1	tape reader input without parity stop.	3

Condition 3 distinguishes between 'busy' and 'not busy', received from the peripheral, in the following manner:

jLY := 1	peripheral 'busy' with input, or
$\overline{\text{jLY}}$:= 1	peripheral 'not busy' with input.

As may be further seen from the flow chart for the LY operation, if the computer receives jLY := 1, it jumps back to MA 1 and begins to send the sense-busy signal, micro-operation Gmj, continuing until $\overline{\text{jLY}}$:= 1 is received.

Additional information on input is contained in subsequent sections, viz. Tape Reader Input and Typewriter Input.

LY-ordrens flowcard

læs 10-41

linie 1

skriv i FL

Flow Chart for the LY Operation

read 10-41

line 1

write in FL

LY - ordrens flowcard

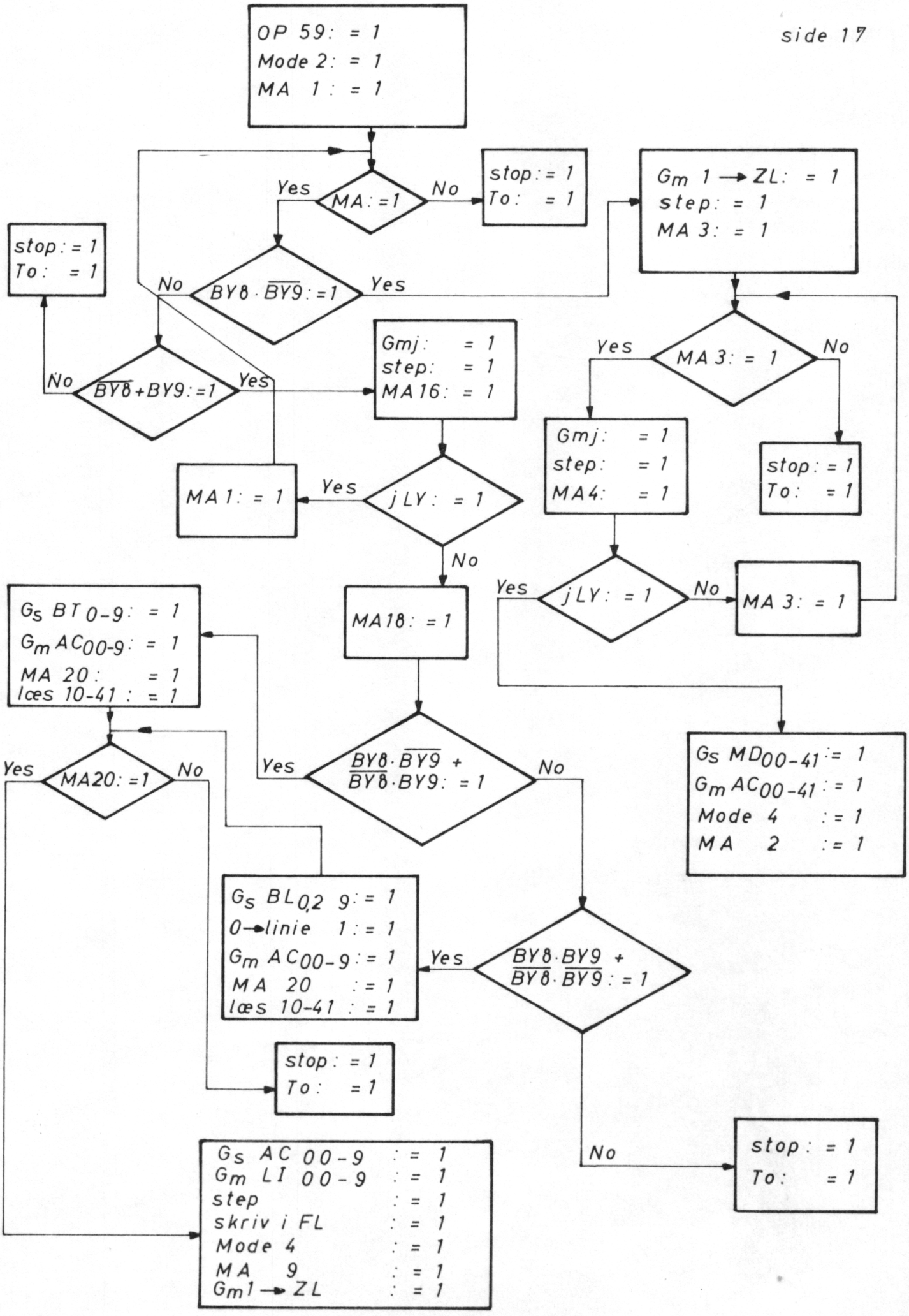

Output via Peripheral

Output via peripheral is achieved by means of the SY operation (OP 58). As may be seen from the flow chart for the SY operation, the seven least significiant positions of the modified address are transferred to positions 3-9 in the BS register.

If the typewriter is selected, the character that corresponds to the contents of the BS register is now written. If the contents of the BS register, however, are such that there is no corresponding character on the typewriter, then this operation merely causes the transfer of the address to the BS register, after which the computer contimues -- without write-out on the typewriter -- with the next operation. The same time is required for writing both existent and non-existent characters.

At least ca. 100 milliseconds must follow such a character, before the next SY operation can be executed, i.e. not until the computer has received the j klar signal from the typewriter.

LOWER CASE (selected by means of the SY 58 operation) causes the write-out of all succeeding characters in lower case, until the SY 60 operation for UPPER CASE is executed, after which all succeeding characters are output in upper case -- this applies however only to output on the typewriter.

SY-ordrens flow-card	Flow Chart for the SY Operation
h.s.	right shift
v.s.	left shift
læs i FL 0-41	read in FL 0-41
skrå	cross

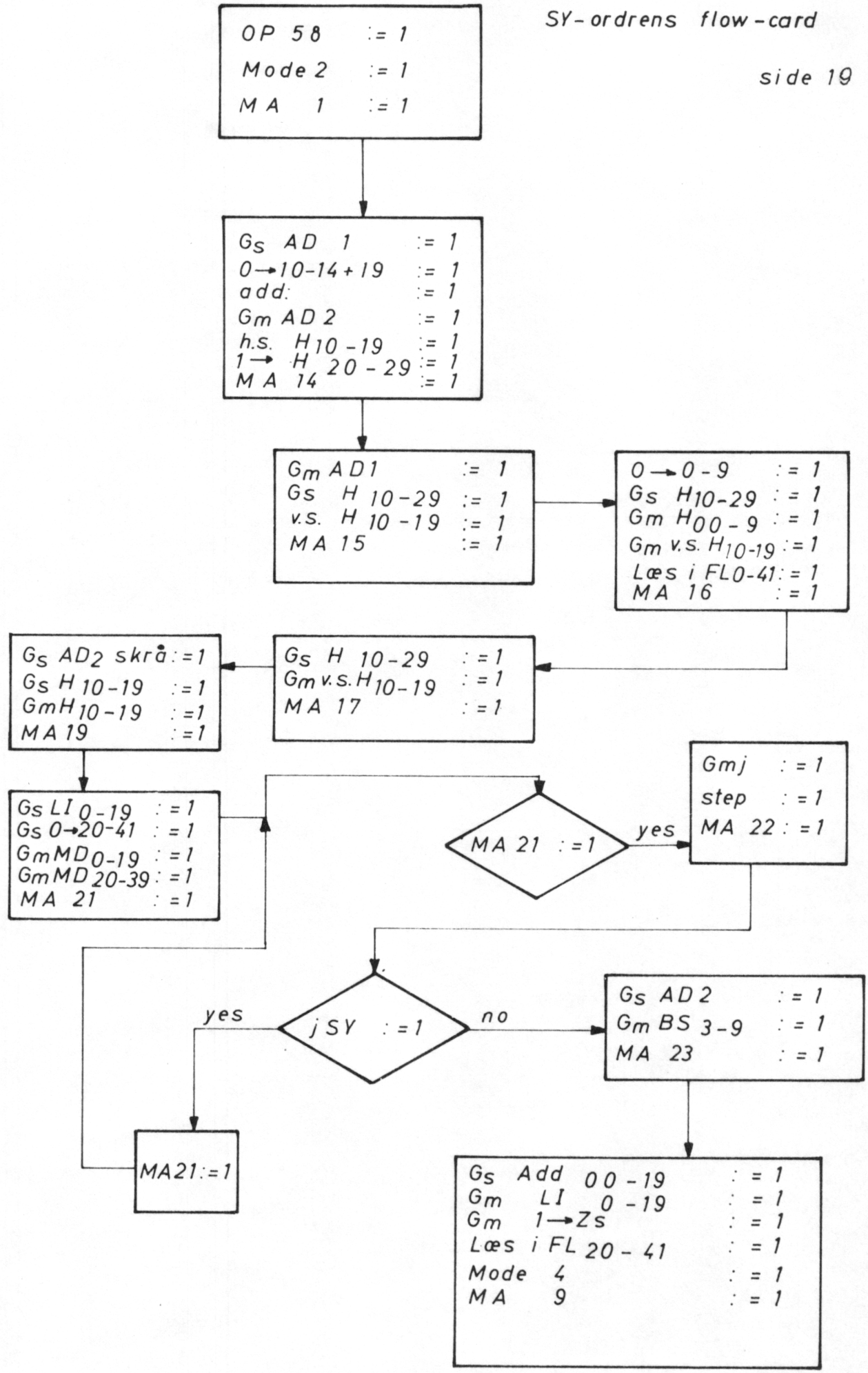
OP 58 := 1
Mode 2 := 1
MA 1 := 1
Gs AD 1 := 1
0→10-14+19 := 1
add: := 1
Gm AD 2 := 1
h.s. H 10-19 := 1
1→ H 20-29 := 1
MA 14 := 1
Gm AD1 := 1
Gs H 10-29 := 1
v.s. H 10-19 := 1
MA 15 := 1
0→0-9 := 1
Gs H10-29 := 1
Gm H00-9 := 1
Gm v.s. H10-19 := 1
Læs i FL0-41 := 1
MA 16 := 1
Gs H 10-29 := 1
Gm v.s. H10-19 := 1
MA 17 := 1
Gs AD2 skrå := 1
Gs H 10-19 := 1
GmH 10-19 := 1
MA 19 := 1
Gmj := 1
step := 1
MA 22 := 1
Gs LI 0-19 := 1
Gs 0→20-41 := 1
GmMD 0-19 := 1
GmMD 20-39 := 1
MA 21 := 1
MA 21 := 1
yes
jSY := 1
yes
no
Gs AD2 := 1
Gm BS 3-9 := 1
MA 23 := 1
MA21 := 1
Gs Add 00-19 := 1
Gm LI 0-19 := 1
Gm 1→Zs := 1
Læs i FL 20-41 := 1
Mode 4 := 1
MA 9 := 1

00 = reacted
11 = reader ueberprueft.

Tape Reader Input

The condition for tape reader input is BY 8 BY 9 + $\overline{\text{BY 8 BY 9}}$: = 1. When a tape has been placed in the reader, the first character on the tape must be placed in the BL register.

This is done in the following manner: when the push-button for one-hole drive is pressed, the signal is fed via KB 8-B to the Schmitt on printed circuit card 244. Here, the 1-character signal from the Schmitt trigger is fed to card 216 A-1, where it sets the ZL flip-flop (ZL: = 1). The 1-character signal also resets the PFS flip-flop (PFS :=0) on card 261-1.

The signal from the ZL flip-flop is fed to three cards: first a monostable flip-flop with a pulse duration of 100 usec. is started on card 202-25; then DISPLAY on card 289-3 is inhibited; and, finally, the YE indicator is illumined on the Display and the Auxiliary Display Panels via 200-39 and KB 6 and KB 12.

The monostable flip-flop that sends the 100 usec. pulse serves two purposes: it sends the start signal to the reader and resets the BL register, so that the latter is ready to receive information from the reader. This reset is necessary, because information input from the reader to the BL register completely bypasses the transfer lines.

The start signal is fed to the reader via KB 8-S from 202-25. When the reader has been started, information from the 1 to 5 or 1 to 8 tracks is fed to the input of the amplifiers on card 289. The output of the amplifiers on 289 overrides the one collector on the BL flip-flop.

The outputs are also fed to card 251, where the entire card forms a half-adder. The parity check is performed here, and the half-adder indicates 1 := parity error on the presence of an even number of holes.

If BY 8 and BY 9 = 0.0 and all holes are present, it is desirable to suppress the parity error found. This is achieved by feeding the inverted signal from the AND-gate on card 289, which indicates all holes present, and the signal from 251, which indicates parity error, to the AND-gate that sets the PFS flip-flop.

If BY 8 and BY 9 := 1, input is desirable from the reader without parity check; for this reason, an additional AND-gate is inserted between the above mentioned AND-gate and the PFS flip-flop, with the following inputs:

$\overline{\text{BY 8}}$:= 1 ,
Gs-BL := 1, and
parity := 1 .

From this it may be seen that if $\overline{\text{BY 8}}$:= 1 , BY 8 := 0 and the parity signal := 1 will stop at this point.

When the reader has read a character, it sends a j klar pulse via KB 8-M to 289. The j klar signal is amplified and fed to 272-1, where it starts a monostable flip-flop with a pulse duration of 10 usec. The pulse resets the ZL flip-flop on 216 A-1.

The first character has now been placed in the BL register, and the reader is ready to receive new instructions regarding input.

Tape reader input is continued by means of the LY operation (OP 59). BY decoding on card 222-7 is utilized here, where the static signal $\overline{BY\ 8}$:= 1 and $\overline{BY\ 9}$:= 1 decodes the reader for input with parith check.

The signal is fed to card 216A-1, where along with Gm 1-ZL it forms inputs to an AND-gate that sets the ZL flip-flop.

As may be seen from the flow chart for the LY operation, Gmj is sent at Mode 2, MA 1. Gmj inputs position, i.e. set or reset, of the ZL flip-flop to the jLY flip-flop, which is incorporated as a condition in the next microstep (jLY := 1 being the condition for peripheral busy whith input).

Here it is assumed that ZL is reset at the beginning of the LY operation. The Gmj pulse will, accordingly, input 0 to the jLY flip-flop, so that jLY := 0. The computer then jumps to MA 18 and so forth, but just prior to the jump to Mode 4, Gm 1-ZL is sent. The ZL flip-flop is then set and remains set.

If, however, it is assumed that the computer immediately afterwards jumps into a new LY operation, it will send a new Gmj pulse and, as mentioned above, the position of ZL (0 or 1) will be input; but because of Gm 1-ZL, ZL := 1 and the jLY flip-flop is hereby set. The computer jumps back and forth between MA 1 and MA 16 in the LY operation now, continously sending Gmj.

Since tape reader input requires ca. 0.5 - 2 miliseconds, the computer may continue to send Gmj for a considerable length of time. When the reader has read a character, it sends j klar to 289. This signal starts a monostable flip-flop. This pulse of ca. 10 usec. resets the ZL flip-flop, and the computer can reset the jLY flip-flop at the next Gmj. The computer is then able to proceed in the microprogram.

When the computer jumps to Mode 4, Gm 1-ZL is sent, and this process continues until there are no more characters to be read from the tape.

If a parity error occurs when BY 8 := 1 and BY 9 := 1, the PFS flip-flop is set. This in turn sets the STOP flip-flop and the computer is stopped.

The PFS indicator is illumined at the same time on both the Display and Auxiliary Display Panels.

If BY 8 := 1 and BY 9 := 1, the parity check output is suppressed, as mentioned earlier, but the parity is transferred to line 0, because BY 8 := 1, Gs-BL := 1, and parity := 1 form inputs to an AND-gate that sets line 0 (line 0 := 1). The information about the parity error is then input to the AC register (cf. microprogram).

Blokdiagram for læsning fra strimmelæser	Block Diagram for Tape Reader Input
blok display	inhibit display
tænd YE lampen	light YE indicator
YE-lamper	YE indicators
1 huls-fremføring	one-hole drive
tegn	character
kør frem til næste tegn	forward to next character
strimmelæser	tape reader
nulstil.	reset
x-felt	matrix
klar	ready
linie	line
til paritetsfejllampe	to parity error indicator
1 af 8 pos	one of eight positions
nulstilling af BL	reset of BL

Typewriter Input

If it is assumed that BY 9 := 1, then typewriter is selected. The decoding of the typewriter keyboard takes place on card 222-7, where BY 8 and BY 9 decode typewriter input.

The static signal is sent to 216A-1, where along with ¡ tastatur, '¡ keyboard,' it forms inputs to an AND-gate. The signal from the latter, along with the Gm¡ signal, forms inputs to a new AND-gate that is connected to an internal line on the card. Since this internal line contains a logical 1, the ¡LY flip-flop is set by the first Gm¡ sent from the microprogram. The computer stops now at the ¡LY := 1 condition and jumps back and forth between MA 1 and MA 16. At the same time, the static tastatur valgt, 'keyboard selected', signal is fed to card 200-39, where along with the condition for the LY operation it forms inputs to an AND-gate, which illumines the PD indicator on both the Display and the Auxiliary Display Panels and the keyboard indicator on the typewriter.

In this state, the computer waits for typewriter input. When a key on the typewriter is punched, the following occurs: the signal from the key punched is fed to one of the three 273-cards, where diode conversion, i.e. conversion to binary representation, of the key takes place. The table on pages 26 and 27 that shows the correspondance between numerical values and typographical symbols. The conversion is fed to 200-15, where the outputs are BT 4 - BT 9. Note that CR has a special output, BT 3.

As may be seen from the block diagram, there is no buffer register between the computer and the typewriter, since the time for punching a key far exceeds the time the computer requires for placing the information in the AC register from the lines.

A Schmitt trigger on card 200-15 is activated the moment the information is clear of the diode logic on the 273-cards. The outputs signal from the Schmitt trigger sets the ZT flip-flop and resets the ¡LY flip-flop on the next Gm¡ signal from the microprogram.

Correspondance between Numerical Values and Typograhical Symbols

NUMERICAL VALUE	BINARY REPRESENTATION	LOWER CASE	UPPER CASE
0	0000000	space	
1	0000001	1	V
2	0000010	2	×
3	0000011	3	/
4	0000100	4	=
5	0000101	5	
6	0000110	6	[
7	0000111	7	]
8	0001000	8	(
9	0001001	9	)
10	0001010	unused	
11	0001011	stop code	
12	0001100	end code	
13	0001101	å	Å
14	0001110	-	|
15	0001111	unused	
16	0010000	0	^
17	0010001	<	>
18	0010010	s	S
19	0010011	t	T
20	0010100	u	U
21	0010101	v	V
22	0010110	w	W
23	0010111	x	X
24	0011000	y	Y
25	0011001	z	Z
26	0011010	unused	
27	0011011	,	10
28	0011100	unused	
29	0011101	red ribbon	
30	0011110	tabulator	
31	0011111	punch off	
32	0100000	-	+
33	0100001	j	J
34	0100010	k	K

NUMERICAL VALUE	BINARY REPRESENTATION	LOWER CASE	UPPER CASE
35	0100011	l	L
36	0100100	m	M
37	0100101	n	N
38	0100110	o	O
39	0100111	p	P
40	0101000	q	Q
41	0101001	r	R
42	0101010		unused
43	0101011	ϕ	Φ
44	0101100		punch on
45	0101101		unused
46	0101110		unused
47	0101111		unused
48	0110000	æ	Æ
49	0110001	a	A
50	0110010	b	B
51	0110011	c	C
52	0110100	d	D
53	0110101	e	E
54	0110110	f	F
55	0110111	g	G
56	0111000	h	H
57	0111001	i	I
58	0111010		lower case
59	0111011	.	:
60	0111100		upper case
61	0111101		unused
62	0111110		black ribbon
63	0111111		tape feed
64	1000000		carriage return

Blokdiagram for skrivemaskine input	Block Diagram for Typewriter Input
skrivemaskine	typewriter
tastatur	keyboard
linie	line
x-felt	matrix
tasta. valgt	keyboard selected
bet. fra LY-ordre	concition from LY operation
klar kontakt	ready contact
tastaturlampe	keyboard indicator
YE lampe i kontrolbord	PD indicator on Display Panel
YE lampe i HP-bord	PD indicator on Auxiliary Display Panel

The computer can then proceed in the microprogram and sends Gs-tastatur 'Gs-keyboard', to 212-2 -- seven positions in all -- as well as a Gm AC 00-9. After this, the information is in the AC register.

When the ZT flip-flop on 202-7 is set, the ZT signal is fed further to 202-19, from there to KB 9-D, and still further to 216-4; here, the signal waits for the next Gmj, when the jSY flip-flop is set.

Setting the jSY flip-flop makes it impossible for the computer to proceed in an SY operation immediately following an LY operation, before the ZT flip-flop is reset and klar, 'ready', is received from the typewriter.

When the LY operation causes a jump, the condition disappears from 200-39 and the typewriter and PD indicators are then extinguished.

When the key has fallen back into place on the typewriter from the platen, a klar contact is activated, sending klar back to the computer via S4-24 to 272-2. Here, a monostable flip-flop is activated for 60 milliseconds. This signal resets the ZT flip-flop, after which the typewriter is ready to receive new input instructions.

Punch Output

The condition for punch output is determined by the SY operation and by setting the Manual Selection buttons on the Auxiliary Display Panel, so that the punch is selected in accordance with positions 3-6 of the BY register. The static signal is sent via KB 12 and 13 to 202-19, where it then waits.

If these conditions are present, the microprogram sends Gm 1-Zs via 200-39 and KB 9-A to 202-19, prior to the jump to Mode 4. The ZP flip-flop is hereby set, causing linie for jS, 'line for jS', to be set (linie for jS := 1), whereupon the jSY flip-flop is set on the next Gmj sent by the microprogram. Setting the jSY flip-flop causes the YE indicators on the Display and the Auxiliary Display Panels to be illumined via 200-39 and KB 6 and 12.

The ZP flip-flop also causes the reset signal to be fed to card 269, where a monostable flip-flop with a pulse duration of 6.5 miliseconds is started. On the leading edge of this signal, a new monostable flip-flop is started on the same card. The motor relay of the punch was also activated on the leading edge.

The monostable flip-flops are required to bring the punch up to maximum operation speed, before punching a character on the tape. When this speed has been attained, in virtue of the monostable delay, the start signal is sent via KB 11-a1 to card 269, where it forms, along with ZP := 1 and the amplified signal := ZP" as well as the last monostable signal from card 269, inputs to an AND-gate, the outputs of which are $\overline{\text{START}}$. This signal overrides the one collector on the FB flip-flop, so that FB := 1.

The FB signal now advances the tape, so that it is clear of the row of holes just punched, and sets the GP flip-flop.

A short time later, the punch sends the klar, 'ready', signal, which is fed via KB 11-a3 and 200-40 to 202-4, where it overrides the one collector on the GP flip-flop, so that GP :=0. The BL flip-flop is hereby reset by the GpF signal, and the gate pulse , BLs, is sent to 202-4, where it forms, along with GP, GP' to 294, thus giving signal to the punch in accordance with the contents of the BS register.

After punching, the punch sends a STOP-signal via KB 11-a2 and 200-40 to card 202-4, where the FB flip-flop is overridden on the collector, so that FB := 0. The tape is hereby locked by the signal via 270 and KB 11-a8.

The black strimmel or 'black tape' signal is sent by means of manual operation of the start switch on the punch. The BL flip-flop is hereby set, inhibiting the gate for GP', and the punch advances the tape without the contents of the BS register being punched. (Tape feed is, of course, punched).

The information from the BS register (placed in the register by means of the microprogram of the SY operation) is fed via 289-3 and KB 9 to 289-4, where the signals are inverted again and then fed to 294 and 251-1.

Card 251-1 consists of a series of half-adders that determine whether the contents of the BS register are even or odd with respect to binary 1. If the number of 1's is even, the outputassumes a negative value, which is in accordance with having a hole punched in track 5.

Blokdiagram over skrivning med perforator	Block Diagram for Punch Output
perforator	paper tape punch
klar	ready
blank strimmel	blank tape
motor rele	motor relay
HP-bord	Auxiliary Display Panel
x-felt	matrix
YE-lampe	YE indicator

Typewriter Output

The condition for typewriter output is determined by the SY operation and by setting the Manual Selection buttons on the Auxiliary Display Panel, in such a way that the typewriter is selected as output device in accordance with the contents of the BY register. The signal is sent via KB 12 and 13 to 202-19, where it waits.

If these conditions are present, the microprogram sends Gm 1-Zs, before the jump to Mode 4, via 200-39 and KB 9-A to 202-19, where the ZS flip-flop is set, causing line for jS ('line for jS') to be set, whereby the jSY flip-flop is set on the next Gmj from the microprogram. Setting the jSY flip-flop causes the YE indicator to be illumined on both the Display and the Auxiliary Display Panels via 200-39 and KB 6 and 12.

In accordance with the SY operation, the information to be written out is sent to the seven least significant positions of the BS register (pos. 3-9), after which a purely static decoding of these seven positions takes place, as the static signals are fed to the decoding cards (203-3 and 203-4). These cards divide the BS register into two halves, with positions 4-6 in the one half and positions 7-9 in the other. Card 203-3 (positions 4-6) forms the control card for positions 7-9, since the ST" condition for write-out is placed on card 203-3.

The St" condition is a function of the position (set or reset) of the ZS flip-flop, since ZS := 1 (due to Gm 1-Zs) is fed to a monostable flip-flop on card 272-3, which has a pulse duration of ca. 3 milliseconds. The static signal of the Zs flip-flop is hereby delayed 3 milliseconds. On the trailing edge of this pulse, a new monostable flip-flop is activated, with a pulse duration of 42 milliseconds. This pulse is called St". The inverted St" signal keeps linie for jS set (linie for jS := 1) as long as the decoding pulse, St" := 42mS, is present. With the help of St", the decoding of the BS register is fed to the 271-cards, which form the derive section for the typewriter.

When the typewriter has written the character on the paper, or possubly on the platen, it sends a klar ('ready') signal via S4-24 to 272-3, where the signal starts a monostable flip-flop with a pulse duration of 60 milliseconds. The ZS flip-flop is reset on the trailing edge of this signal. The 60 milliseconds are necessary, since the miximum operating speed of the typewriter is ca. 12 char./sec.

If it is assumed that the contents of the BS register do not correspond to any character on the typewriter in binary representation (cf. table on pages 7-26 and 27), then the output of the drive section is fed to klar af ubrugte tegn, 'ready from unutilized characters', which resets the ZS flip-flop, so that the computer can proceed in the microprogram after waiting ca. 45 milliseconds.

The typewriter contains special keys, such as Upper Case and Lower Case, and the computer includes a special Upper/lower Case flip-flop, by means of which the typewriter is locked in the case desired, until other declaration is made. If two Upper of Lower Cases follow immediately after each other, the computer does not wait very long, since the KLAR flip-flop from Upper and Lower Case sends klar af ubrugte tegn for reset of the ZS flip-flop.

Other special keys are Black and Red Ribbon Shift, with a special input for reset of the ZS flip-flop, since they activate the monostable flip-flop with a pulse duration of 60 milliseconds that resets the ZS flip-flop on the trailing edge of the pulse.

If it is assumed that the next operation is an LY operation, the computer cannot execute it, before jLY flip-flop (which was set on Gmj from the SY operation) has been reset, which must be done first by pressing a key on the keyboard. This cannot, however, be done until the typewriter is finished writing what was desired from the SY operation.

Blokdiagram skrivning på skrivemaskine	Block Diagram for Typewriter Output
afkodning	decoding
skrivemaskine tastatur	typewriter keyboard
klar signal	ready signal
sort farvebånd	black ribbon
klar til	ready to
linie	line
ubr. tegn	unused character
sort ind	black in
fra afkodning	from decoding
rød ind	red in
HP-bord	Auxiliary Display Panel
YE-lampe	YE indicator

Line Printer Output

Line printer output proceeds along the same lines as punch output. Information from the BS register is fed statically to the line printer via 289-3 and KB 9 as well as 289-4 and KB 14.

The ZA signal to the line printer originates, when the Manual Selection buttons on the Auxiliary Display Panel are set, in accordance with the contents of the BY register, in such a way that the line printer is selected.

The static signal is fed via KB 12 and KB 13 to 200-4 where it forms along with Gm 1-Zs inputs to an AND-gate, the output of which is ZA. The signal is fed via KB 14 to the line printer.

The line printer sends Z0 via KB 14 to 202-19. The inverted signal controls the line called linie for jS, 'line for jS', which sets the jSY flip-flop on the next Gmj from the SY operation, whereupon the YE indicators on both the Display and the Auxiliary Display Panels are illumined.

These indicators are extinguished again, when the jSY flip-flop is reset, either by RESET or on the next Gmj, which inputs 0 from linie for jS.

Blokdiagram for skrivning på Anelex

Anelex

YE-lampe i KB-bord

YE-lampe i HP-bord

HP-bord

Block Diagram for Line Printer Output

line printer

YE indicator on Display Panel

YE indicator on Auxiliary Display Panel

Auxiliary Display Panel

The Control Unit Circuit

The GIER computer contains 64 instructions or macro-operations, which are executed by means of built-in micro-operations. The execution of a macro-operation takes place in four stages or modes: each macro-operation executed goes through Mode 1, Mode 2, and Mode 4; Mode 3, an extension of Mode 2, is used mainly in operations with floating point arithmetic.

Each macro-operation has its own microprogram, comprising Mode 1 (the same for all operations), Mode 2 (special for each individual operation), and Modes 3 and 4 (the same for all operations). Address modification is carried out in Mode 1, the actual microprogram, corresponding to the given macro-operation, in Modes 2 and 3, and indicator operations in Mode 4. Mode 5 constitutes a special microprogram, used in connection with the HELP system, and is described separately.

A microprogram is executed in time steps with a clock frequency of ca. 450 KHz. At each step a micro-operation, consisting of combinations of built-in microfunctions, is executed. For a given core in a built-in fixed wired store (also referred to as KE) there is a given microfunction that is executed, when that core is activated. Roughly 185 different microfunctions are included in the computer. Micro-address flip-flops, numbered 1-24, correspond to these steps. At a given step, one of the microfunctions will always be selection of the next step (MA flip-flop), which is not necessarily the nearest lower or higher number. A core is activated by voltage coincidence between an MA flip-flop and a decoding for selection of the microprogram.

Conditions may be introduced for any micro-operation: if a certain condition is present, a micro-operation corresponding to it will be executed; if not present, a different one will be executed. With the exception of substitution instructions, the microprogram for a macro-operation is ended by selection of MA flip-flop 1 and Mode 1, and this, accordingly, is the state at the outset, when a new macro-operation is to be carried out.

The control unit in the computer comprises a built-in fixed wired store (KE), 24 MA flip-flops, and a total of about 700 diodes (one for each micro-operation) for decoding of selection of the microprogram and the micro-operation. All decodings end on solder terminals, of which there are some 300.

Clock pulses, the fixed wire store, MA flip-flops, diodes, terminals, and gates for decoding of registers and mode flip-flops are shown on the Principle Diagram. Clock pulses KPA_l and KPO_h, which are identical, constitute the normal clock pulse in the computer. An MA flip-flop is set (selected) as a function of the KE signal, which is the differentiated and inverted output from an activated core in the fixed wired store. An MA flip-flop is reset by the differentiated clock pulse KPO_h. Mode flip-flops are set as a function of an activated core, and are reset by the next mode flip-flop.

At a given step during the execution of Mode 1 of a macro-operation, MA flip-flop N is selected. If decoding indicates that condition Q is present, terminal B is selected; if condition R is present, terminal C is selected; if neither of these conditions is present,

terminal A is selected. Decoding and diode logic are so arranged that only one terminal (A, B, or C) is selected, never two or more at one time; the logical inversion in the diode logic, moreover, gives condition terminals, e.g. B and C, priority over operation terminals, e.g. A. When clock pulse KPA_1 is logical "1" and MA flip-flop N and either terminal A, B, or C are selected, then a number of cores (microfunctions), corresponding to this given micro-operation, will be activated.

It may be seen that with the same MA flip-flop selected, but in accordance with which terminal a condition is present for, different cores will be activated, corresponding to the execution of different micro-operations. Logically, this may be expressed as follows:

$$\text{micro-operation } X = (KPA_1 \cdot \text{MA flip-flop N}) \cdot (A \cdot \overline{B} \cdot \overline{C}),$$

from which it may be seen that in order to have the micro-operation that corresponds to terminal A executed, terminals B and C must be logical "0" (not selected). The decoding logic makes it impossible for conditions Q and R to be present at the same time.

With respect to time, the control unit is governed by the clock pulses. The microfunctions are executed on the leading edge of KPA_1. The next MA flip-flop is set on the trailing edge of KPA_1, as a consequence of the differentiation and inversion of the output on the cores that select the next MA flip-flop; at the same time, the previous flip-flop is reset by KPO_h. Two MA flip-flops are therefore not selected simultaneously. As shown on the drawing, an MA flip-flop is set in a clock period.

At the end of Mode 1 (address modification), the Mode 2 flip-flop and MA flip-flop 1 are set. Setting the Mode 2 flip-flop provides the condition for the decoding of the macro-operation (S), and terminal D is then selected, if conditions T and U are not present.

As shown on the drawing, one terminal can in principle be connected to more than one MA flip-flop, and one MA flip-flop to more than one terminal.

MODE 5

The HP button is used to interrupt the program being run and to activate the program stored on track 0. This interruption is made in such a way that it is possible to re-establish the situation before interruption by means of programming. The exact function of the HP button is described in Christian Gram: A Manual of GIER Programming, Volume 2, Section 13.2.1.

By pressing the HP button, a Schmitt trigger is activated that gives the signal 1-HP. The HP flip-flop is set, if the condition for the following AND-gate is present, namely that:

1. Mode 5 is not set, and
2. BY0·VAC is not "1".

The first condition prevents HP from being set again, while Mode 5 is being executed. The second condition applies in the following: if BY0 is set and the Mode 5 flip-flop is to be activated without using the RESET button, this is only possible by resetting BY0 from the Display Panel; if the HP flip-flop is set and the BY0·VAC circuit is not intact, the Mode 5 flip-flop is activated the moment BY0 is reset, and the Mode 5 microprogram is executed with line 0 overridden to 0.

With BY0·VAC intact, the HP flip-flop is reset by VAC, and 1-HP is inhibited, until BY0 is reset.

Now it is only possible to activate the Mode 5 flip-flop by pressing the HP button again.

If the computer is stopped in Mode 1, MA 1, and if BY0 is reset, setting HP causes Mode 5 to be set.

If the computer is in operation, the state, where Mode 1 = "1" and MA 1 = "1", must be present; this only happens on the completion of one operation and before the start of the next.

Since the VAC condition is not present, only the differentation circuit on 209-2 is open to Mode 1; otherwise Mode 5 might be activated at a point, when the first microstep in the next operation was executed before the setting of the Mode 5 flip-flop had been able to reset the Mode 1 flip-flop.

When Mode 5 is set, Mode 1 and HP are reset and 1-HP is inhibited. Operation terminals 231 and 232 for the Mode 5 microprogram have now been selected from output C6-7-5. By means of the amplifier on C6-3, access is given to condition terminals 115 and 128.

At the same time, the Mode 5 signal is sent via an amplifier on C6-4 to the start-stop circuits and the computer is started.

During the Mode 5 microprogram, setting the b flip-flop causes output of core store cells 0-39 to drum track 38, while resetting the b flip-flop causes input of drum track 0 to core store cells 0-39; in addition, 0T is set equal to 1.

Finally, the Mode 1 and MA 1 flip-flops are set. A signal that resets Mode 5 is hereby sent via the amplifier on 209-5.

If NORMAL STOP (STOP) on the Display Panel is manually activated now, the computer is stopped here and track 0 is stored in core store cells 0-39.

If STOP is not activated, the computer proceeds and executes the operation in cell 1.

In order to execute the Mode 5 microprogram step by step, the following must be done:

1. reset,
2. set the test switch to Test 3 or 4,
3. press the HP button,
4. press MIKROTEMPI STOP (~~[illegible]~~), and (LGIER)
5. set the test switch to Normal Run.

The computer is now in Mode 5, MA 1, and the microprogram can be executed step by step.

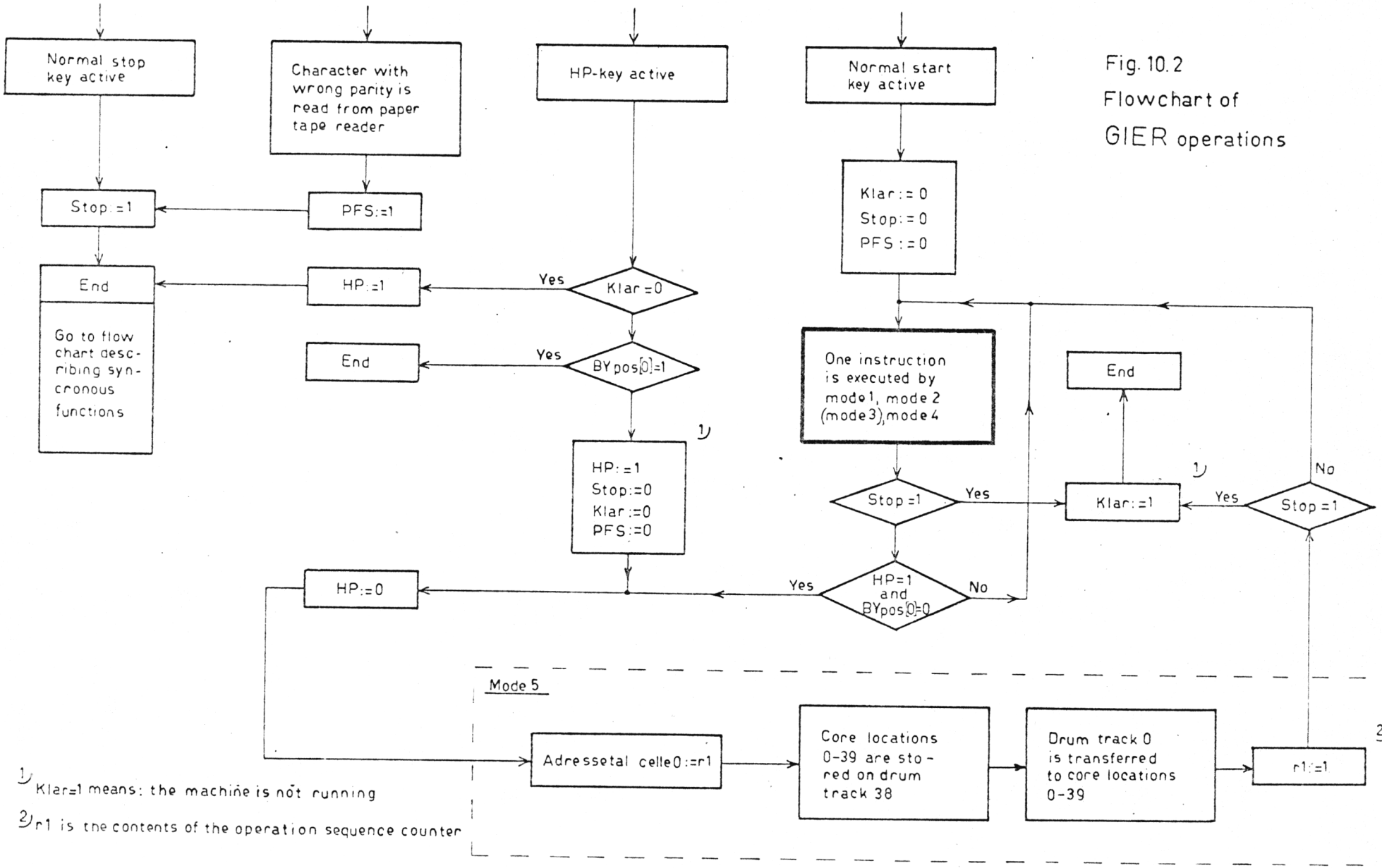

Fig. 10.2
Flowchart of
GIER operations

1) Klar=1 means: the machine is not running

2) r1 is the contents of the operation sequence counter

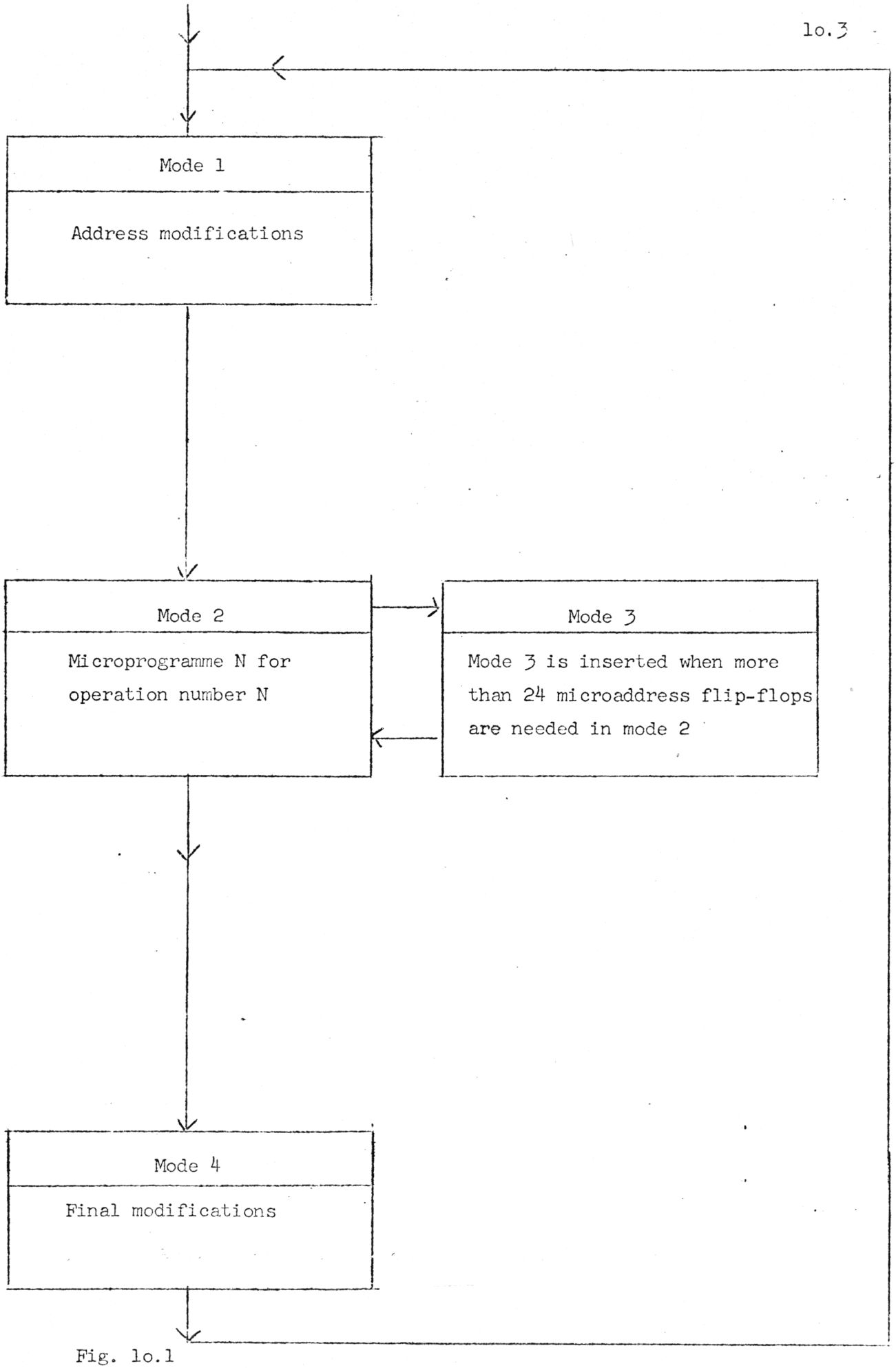

Fig. lo.1

General principle of the sequence of microprogrammes at the execution of one operation.

5. Core Store

side 1 g fram.

The timing-circuits for the core-store are controlled by means of 6 flip-flops (card 1022) one for each type of core-store functions, as seen from the microprograms. These signals are coded together to a central start-signal: Start CS, which will originate a number of pulses spaced in time (RT, WT, Strobe prim. etc.) The timing is shown in the timing-schedule.
As seen from the CS-Decoding-System diagram (Vol-1), the 10-bits register AD1 is divided in 4 groups: 2 groups controlling the y-wires and 2 groups controlling the x-wires. The cards 1002-1 are decoding the 3-bits-groups. The signals from the decoding-cards are wired to the matrix-drivers (cards 1001-1), where the final decoding is found. The matrix-drivers gates the drive-current (cards 1023) to the selected wire.

GIER SYSTEMER.

CORE STORE	1
CS TIMING	2
CS TIMING SCHEDULE	3
CS DECODING	4
CS MATRIX DRIVER X	5
CS MATRIX DRIVER Y	6
PUNCH OUTPUT	7
TAPE READER INPUT	8
TYPEWRITER INPUT	9
—"— OUTPUT	10
LINE PRINT OUTPUT	11
START - STOP circuit	12
~~BLOCKING~~ INDICATOR	13
HP-BUTTON, MODE 5	14
GIER STYREENHED, PRINCIP	15
MAINS COMPONENTS	16
H.T. SECTION	17

MODE 1
MODE 2 (og 2-3-4-5)
MODE 3
MODE 4
TROMLE, STORT FORMAT

} BJARGERST 17a ---!

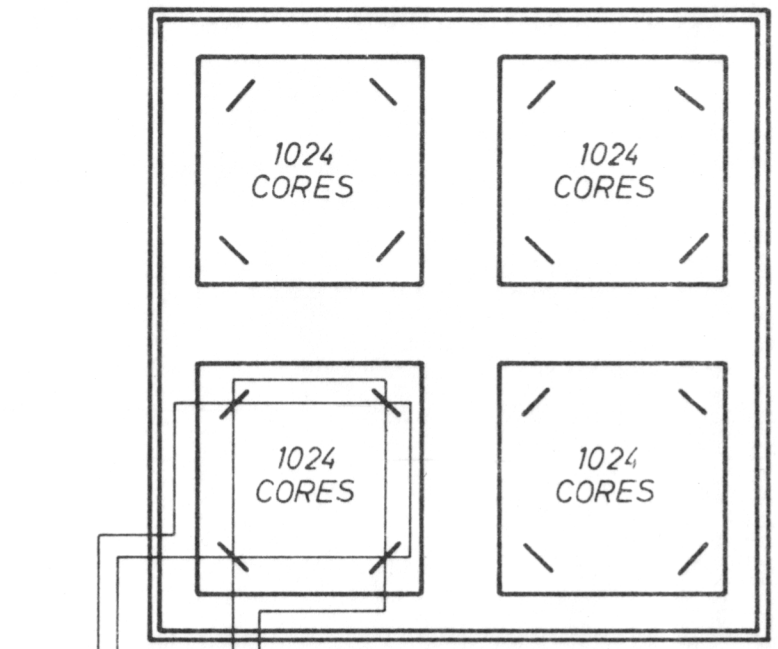

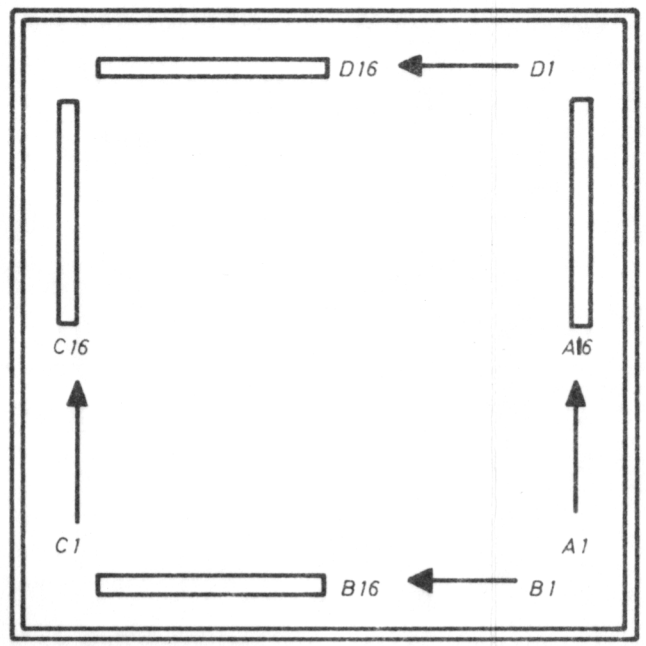

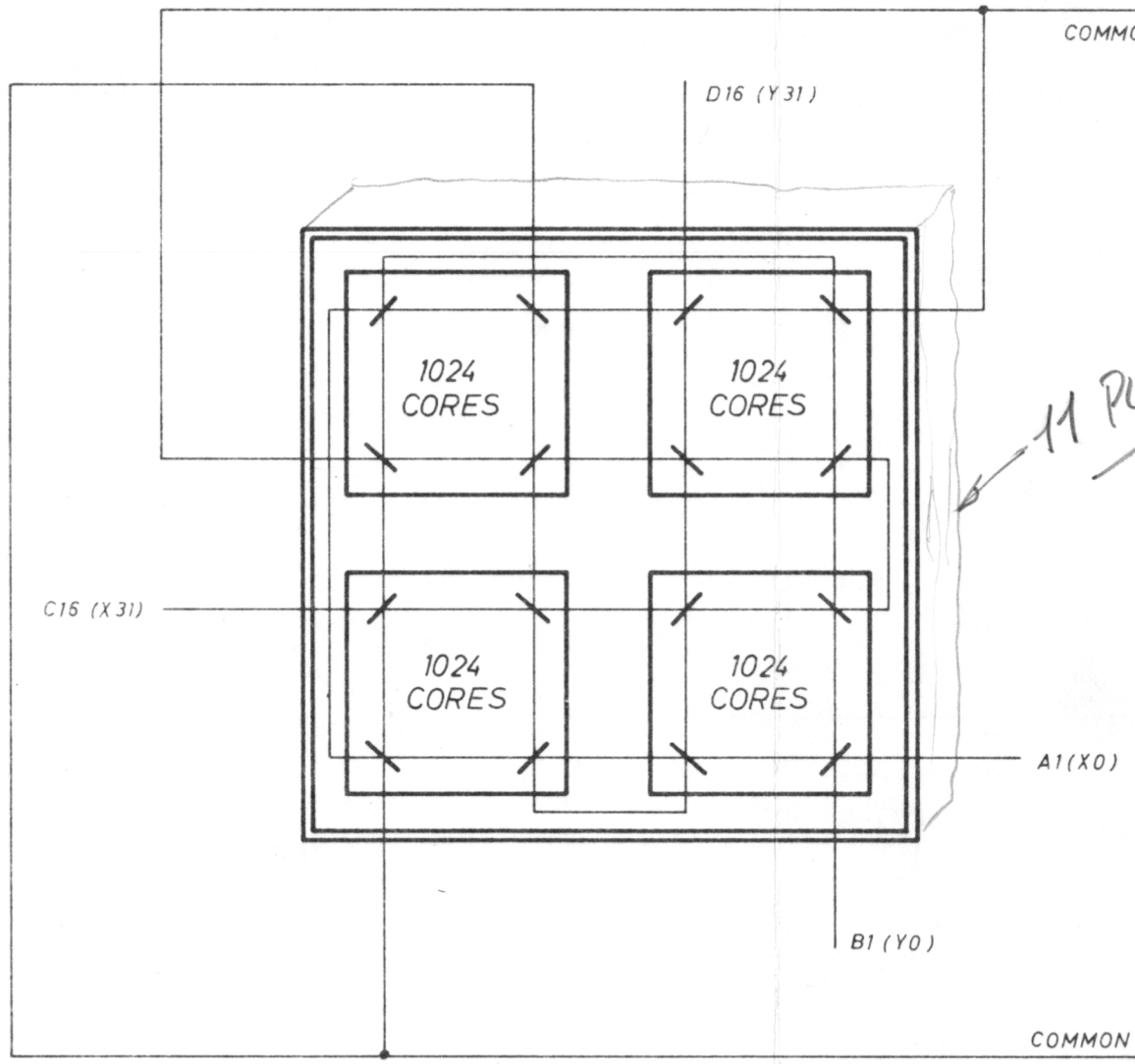

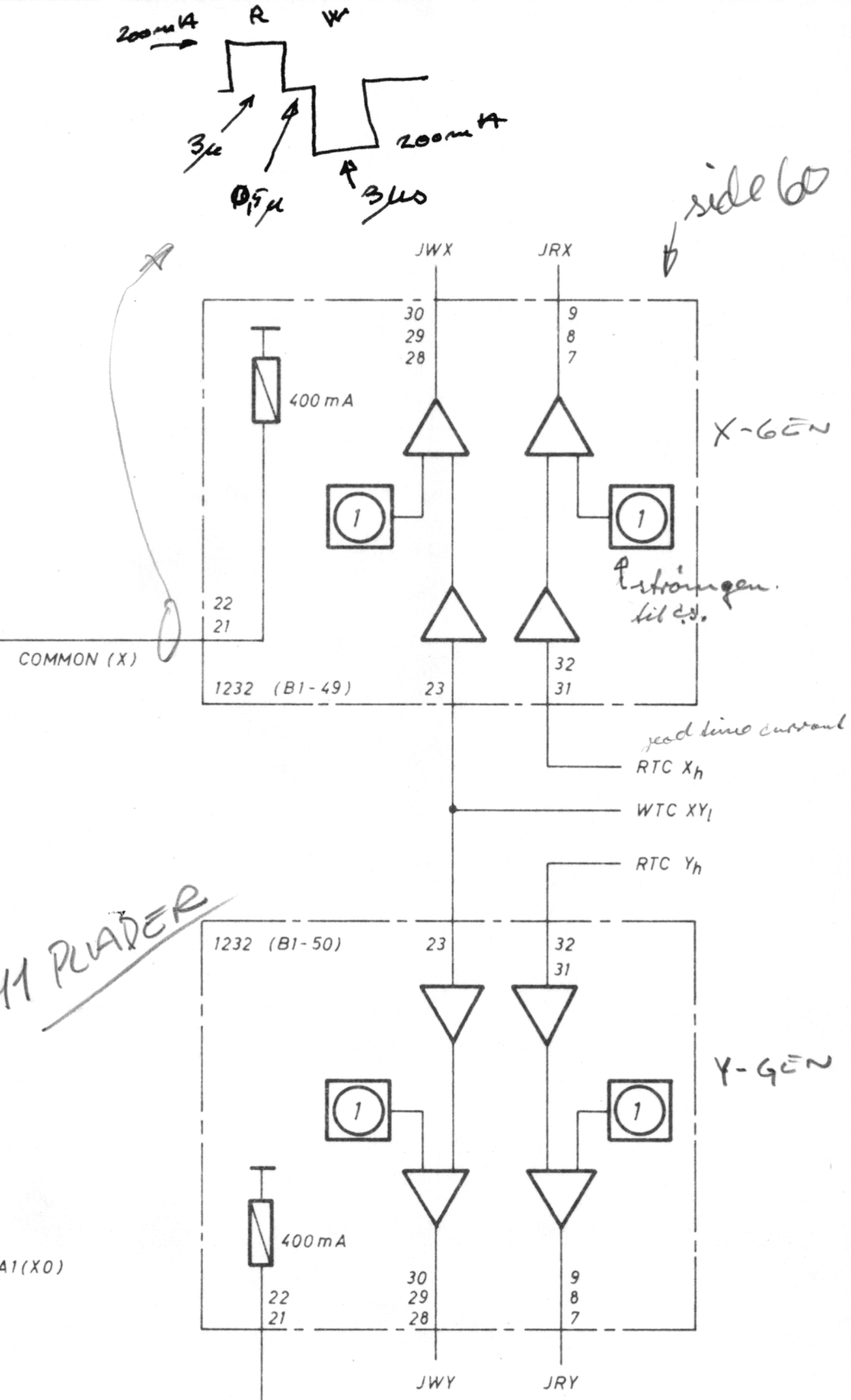

Unit GIER 6	Designed K.H.	CORE STORE.	Drawing No
A/S REGNE CENTRALEN	Approved		Drawn by G.T. 10.2.67.
	Checked 1.2.62.		Checked F.E. 26-2-67
	Last Revision		1 Sheets / Sheet 1

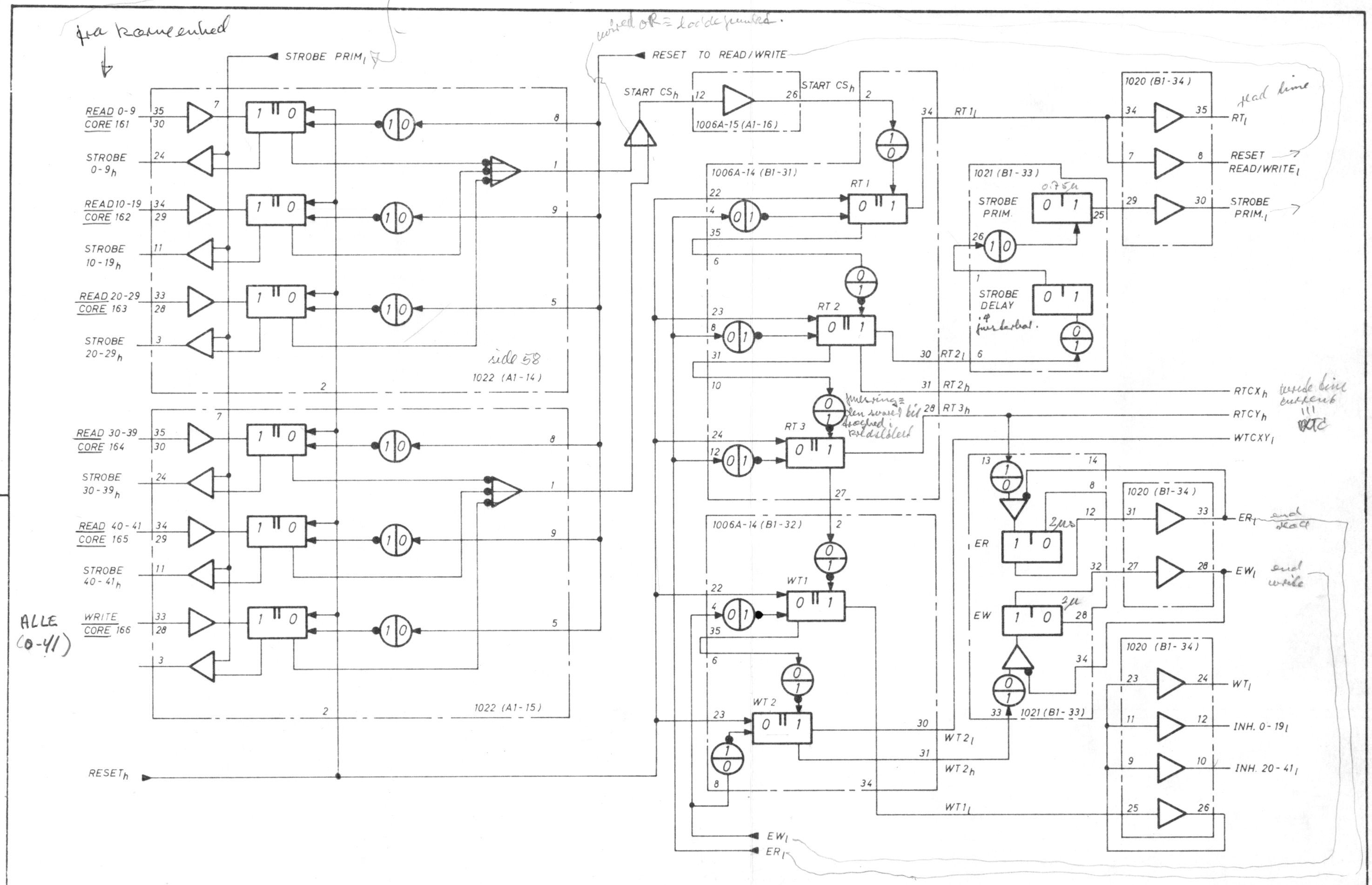

Unit GIER 6	Designed H.I.	CS TIMING	Drawing No
REGNE CENTRALEN	Approved		Drawn by G.T. 26.1.67.
	Checked 1.2.62.		Checked F.E. 26-2-67
	Last Revision		1 Sheets / Sheet 1

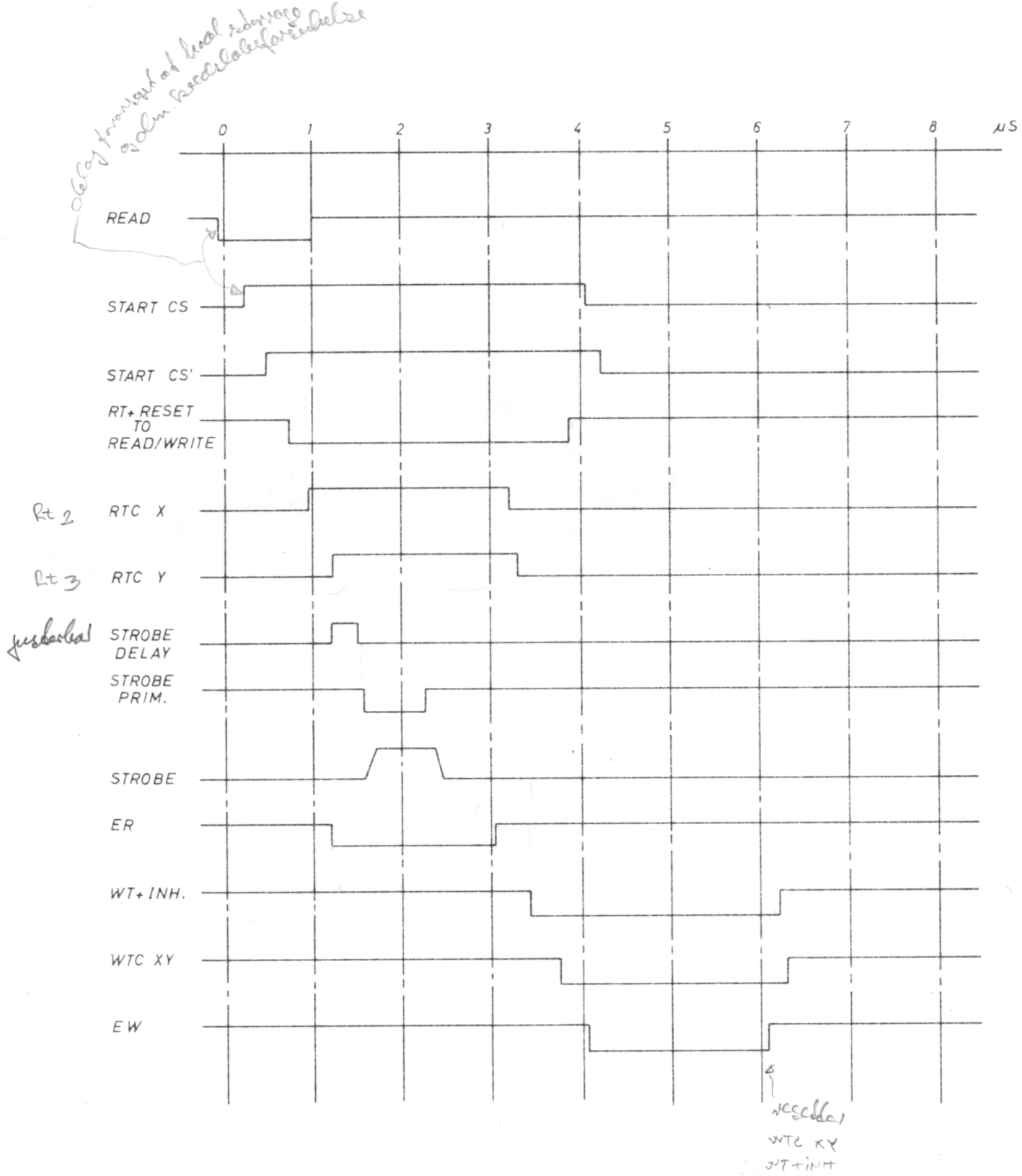

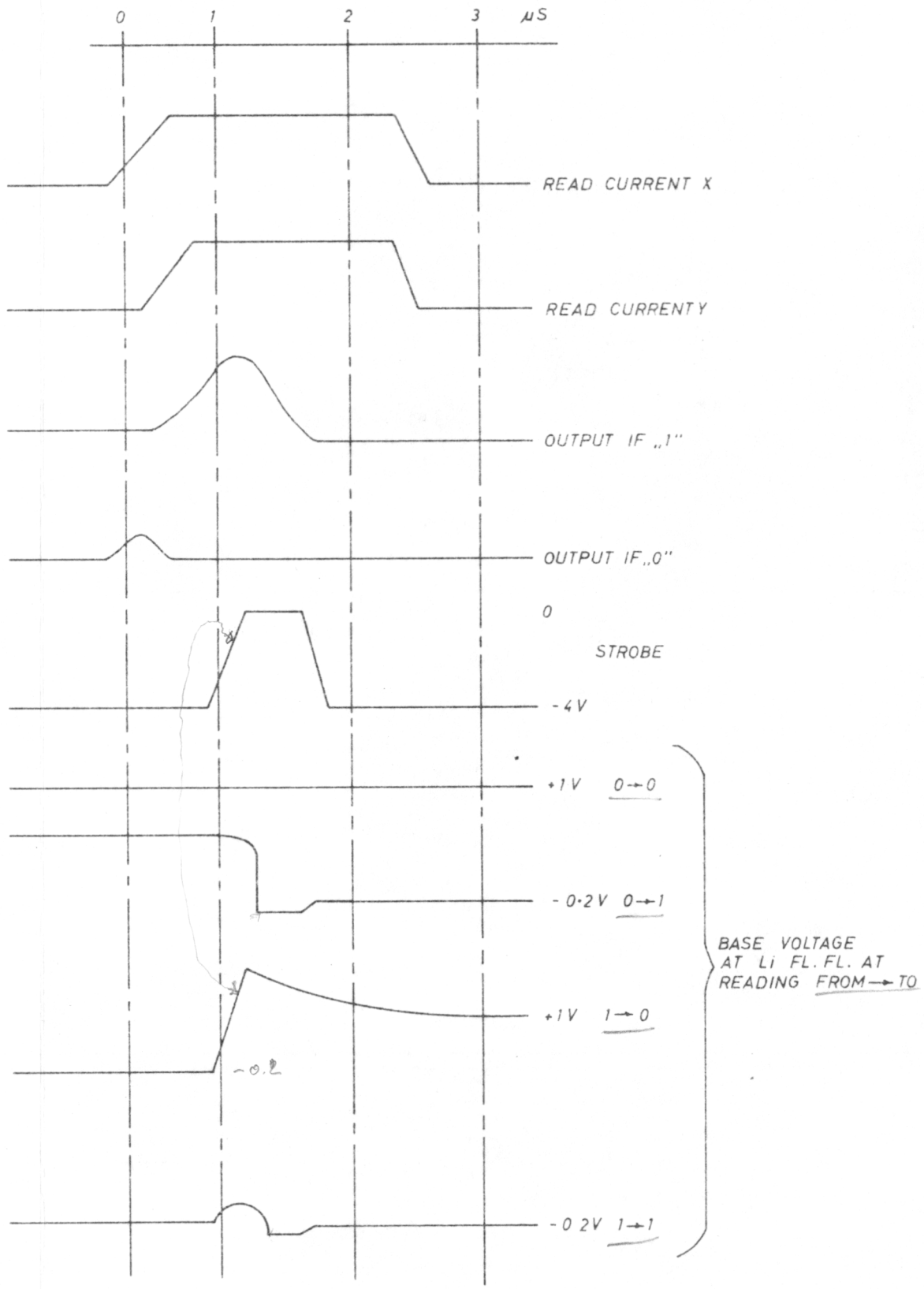

Unit GIER 6	Designed K. H.	CS TIMING SCHEDULE.	Drawing No
A/S REGNE CENTRALEN	Approved		Drawn by G. T. 10. 2. 67.
	Checked 1. 2. 62.		Checked F. E. 26-2-67
	Last Revision		1 Sheets / Sheet 1

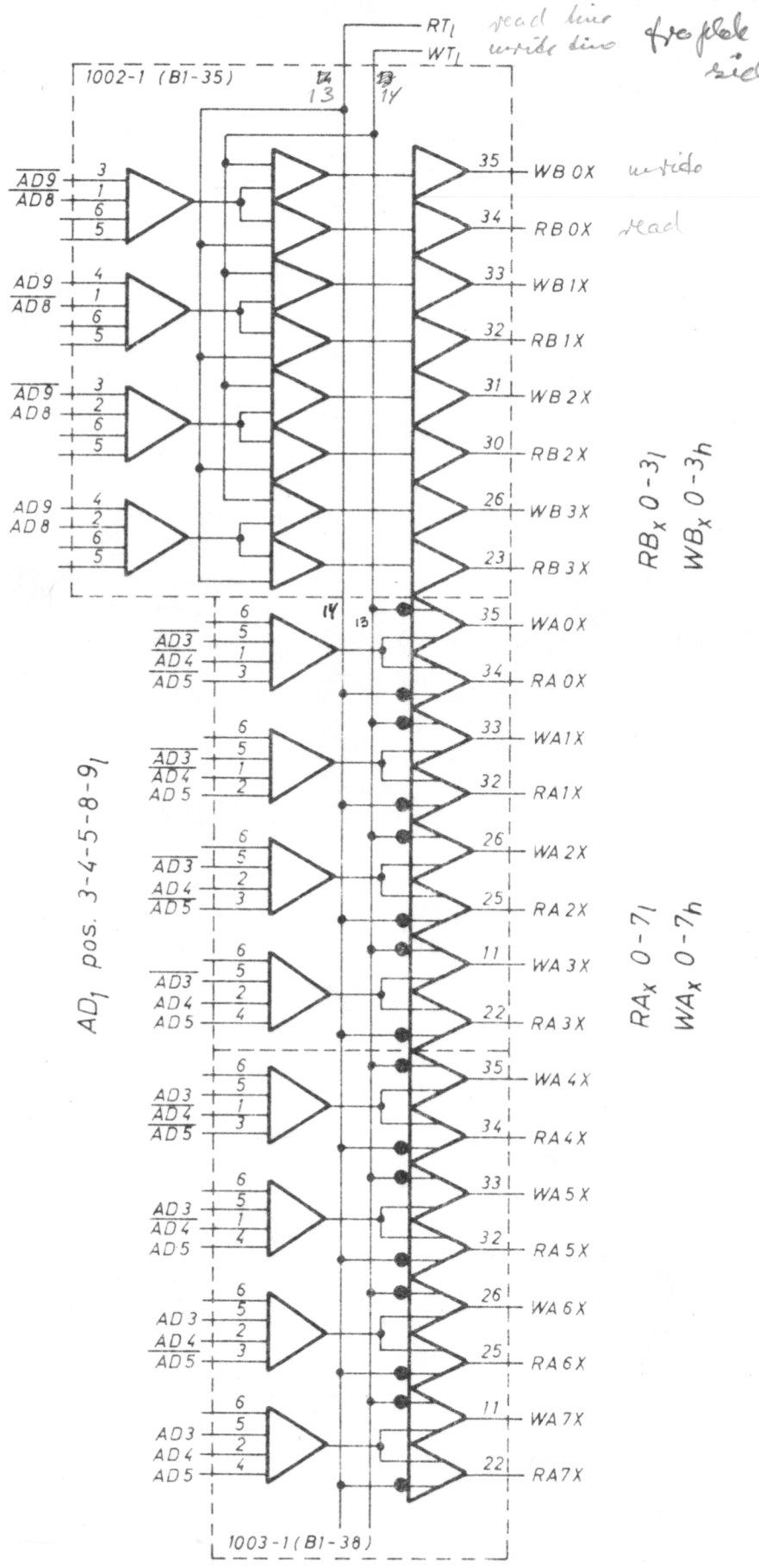

read line
write line

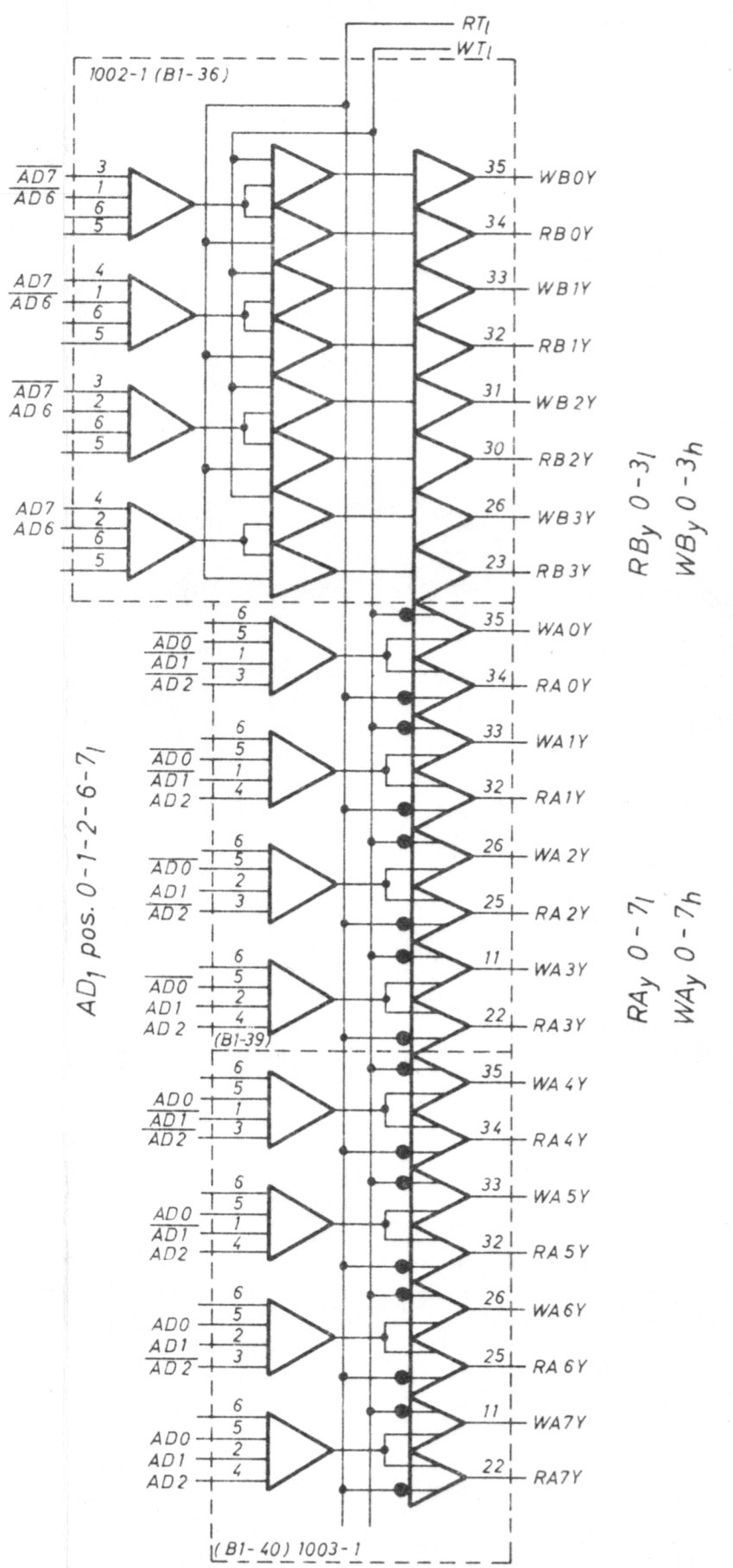

Unit GIER 6	Designed K.H.	CS DECODING.	Drawing No
REGNE CENTRALEN	Approved		Drawn by G.T. 8.2.67.
	Checked 1.2.62.		Checked F.E. 26-2-67
	Last Revision		1 Sheets / Sheet 1

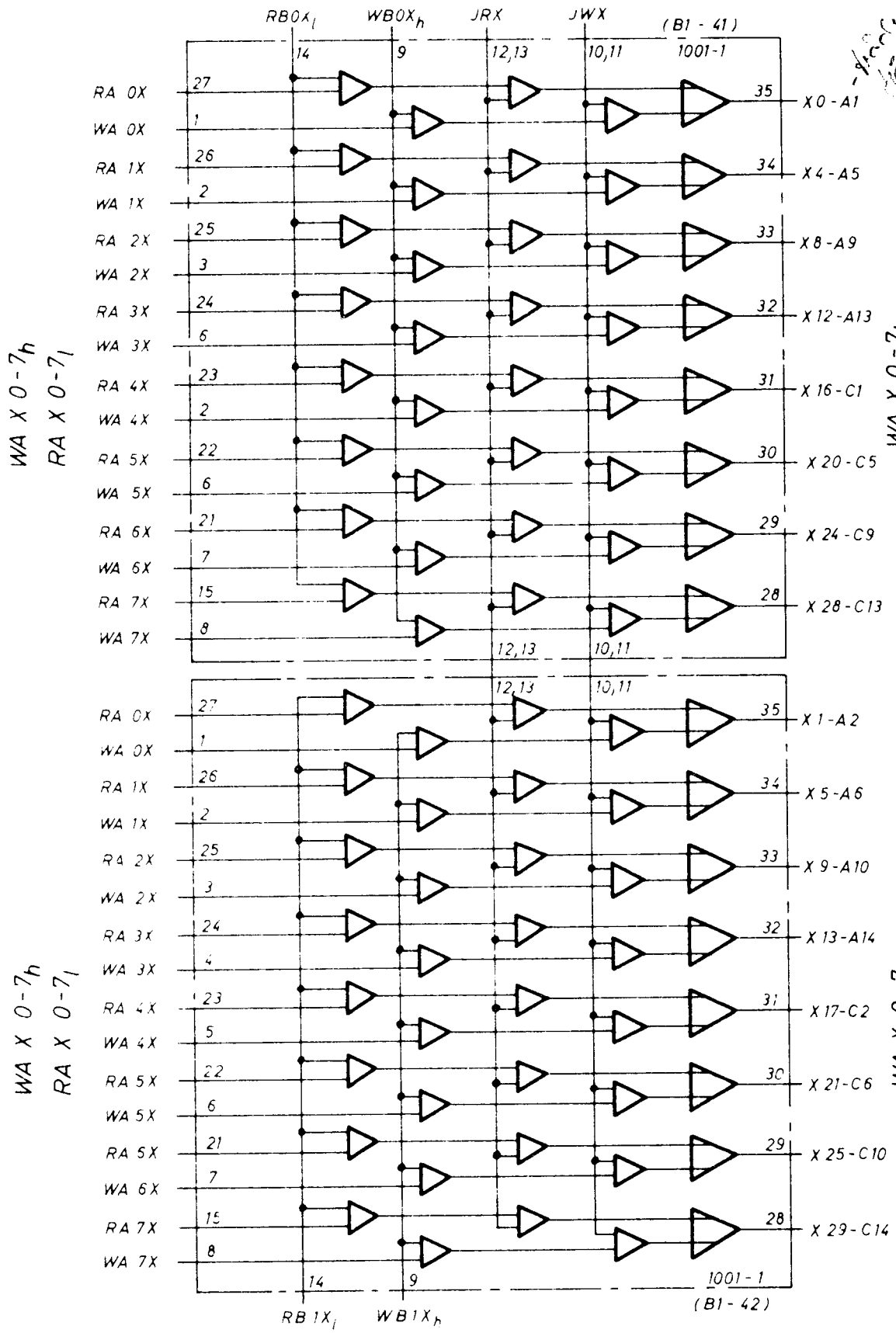

Unit GIER 6	Designed K.H.	CS MATRIX DRIVER X.	Drawing No
REGNE CENTRALEN	Approved		Drawn by G.T. 2.1.67.
	Checked 1. 2. 62.		Checked F.E. 26-2-67
	Last Revision		1 Sheets / Sheet 1

#5

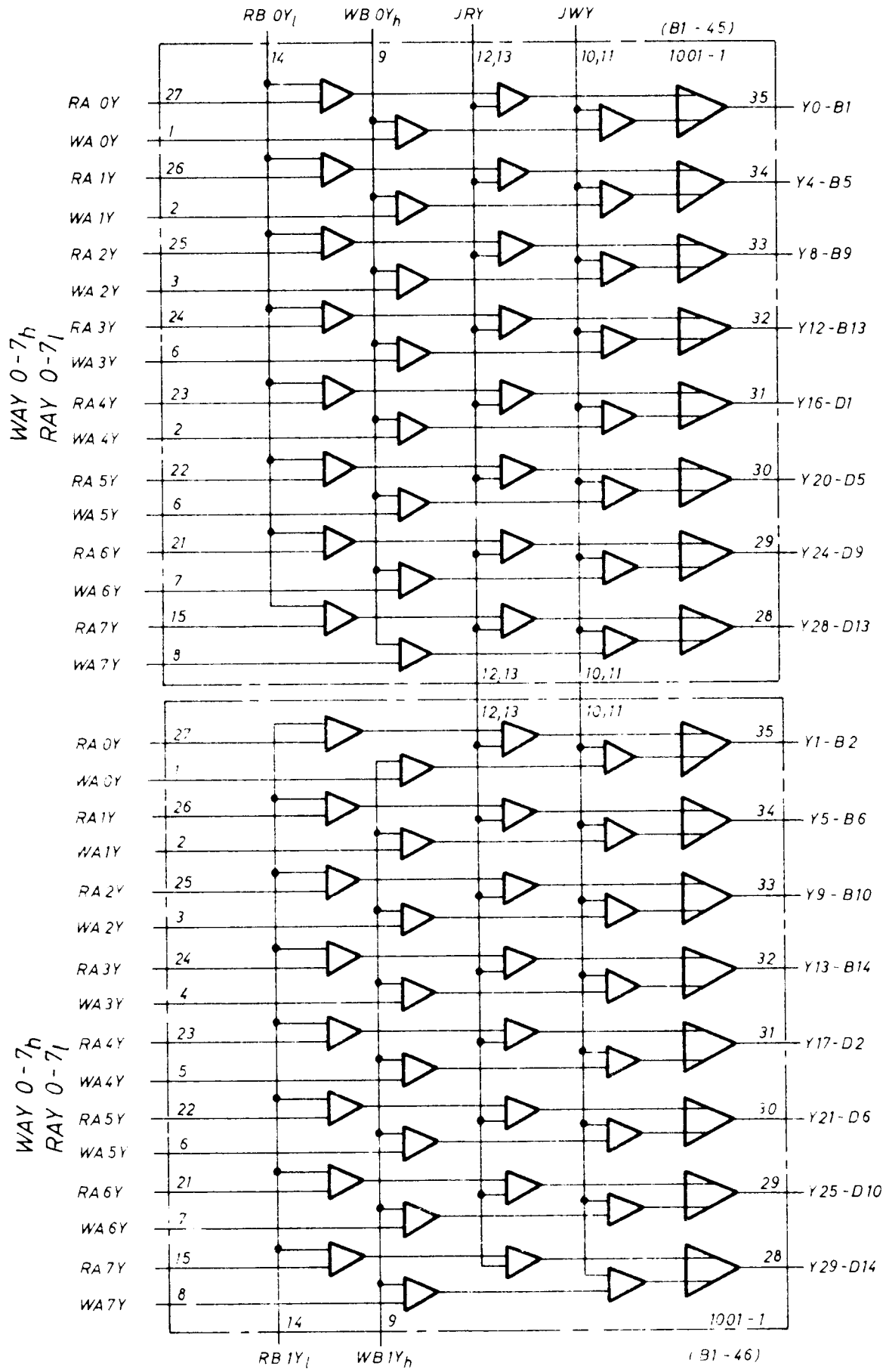

Unit GIER 6	Designed K.H.	CS MATRIX DRIVER Y.	Drawing No
REGNE CENTRALEN	Approved		Drawn by G.T. 14.2.67.
	Checked 1.2.62.		Checked F.E. 26-2-67
	Last Revision		1 Sheets / Sheet 1

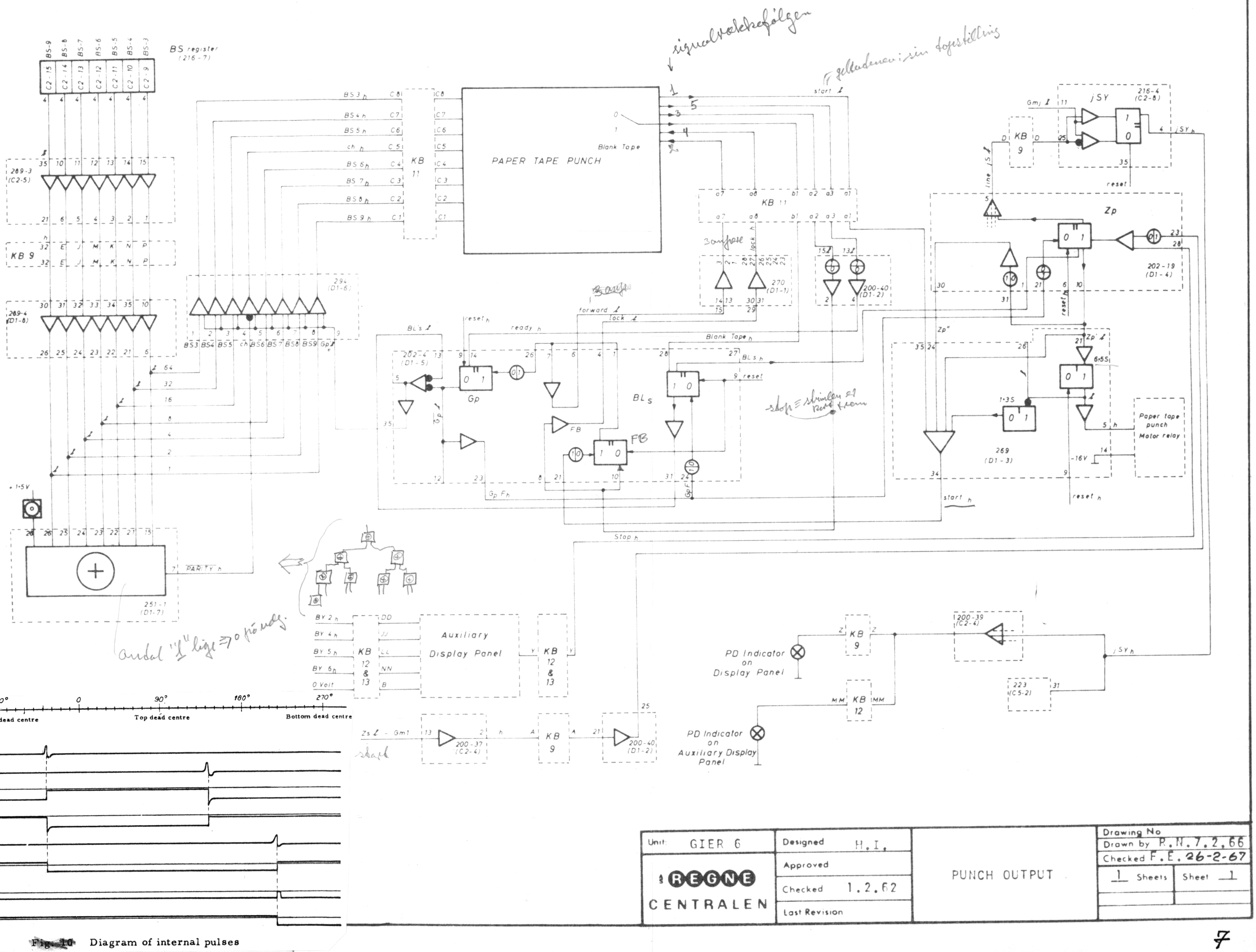

Fig. 10 Diagram of internal pulses

Unit: GIER 6	Designed H.I.	PUNCH OUTPUT	Drawing No
REGNE CENTRALEN	Approved		Drawn by P.N. 7.2.66
	Checked 1.2.62		Checked F.E. 26-2-67
	Last Revision		1 Sheets / Sheet 1

jerklarsignal

modtaget klarsignal fra den ydre enhed

optaget læs

Operation nr. 59

Operation LY

MA	Gs	Gm	FL	Betingelse	nr.	Hop
1		1-Z1				
		step		BY8·$\overline{BY9}$ (HULKORT)	52c	3
1		Gmj + step		$\overline{BY8}$ + BY9 (tafel X TW)	52a	16
3		Gmj + step				4
4	blind			jLY OPTAGET	51b	3
4		MDoo-41				
		step		$\overline{jLY}$ KLAR	51a	7
7	MDoo-41	ACoo-41				
	Mode 4					2
16	blind			jLY OPT	51b	1
16	blind			$\overline{jLY}$ KLAR	51a	18
18	BTo-9	ACoo-9	læs lo-41	BY8·$\overline{BY9}$+($\overline{BY8}$·BY9)TW	52a	2o
18	BL o.2-9	ACoo-9				
	O-linie 1		læs lo-41	BY8.BY9+$\overline{BY8}$·$\overline{BY9}$ lov	52b	2o
2o	ACoo-9	LIo-9				
	Mode 4	1-Z1				
		step	skriv			9

REGNECENTRALEN
Dansk Institut for
Matematikmaskiner

FE 12-10-64

MIKROPROGRAM

Serie 3.

GIER

1 Sider

Side 1

Operation nr 58

Operation SY

MA	Gs	Gm	FL	Betingelse	nr.	Hop
1	AD1	AD2				
	o10-14+o19	H10-19h.s.				
		H20-29				
	add					14
14		AD1				
	H10-29	H10-19v.s.				15
15	o0-9	H00-9				
	H10-29	H10-19v.s.	læs0-41			16
16	H10-29	H10-19v.s.				17
17	AD2 skrå	H10-19				
	H10-19					19
19	LI0-19	MD0-19				
	o20-41	MD20-39				21
21		Gmj				
		step				22
22	AD2	BS3-9		$\overline{jSY}$	55a	23
22	blind			jSY	55b	21
23	Add00-19	LI0-19	læs 20-41			
		1-Zs				
	Mode 4					9

REGNECENTRALEN
Dansk Institut for
Matematikmaskiner

MIKROPROGRAM

10-7-63 PTN
9-9-64 FE

GIER

1 Sider

Side 1

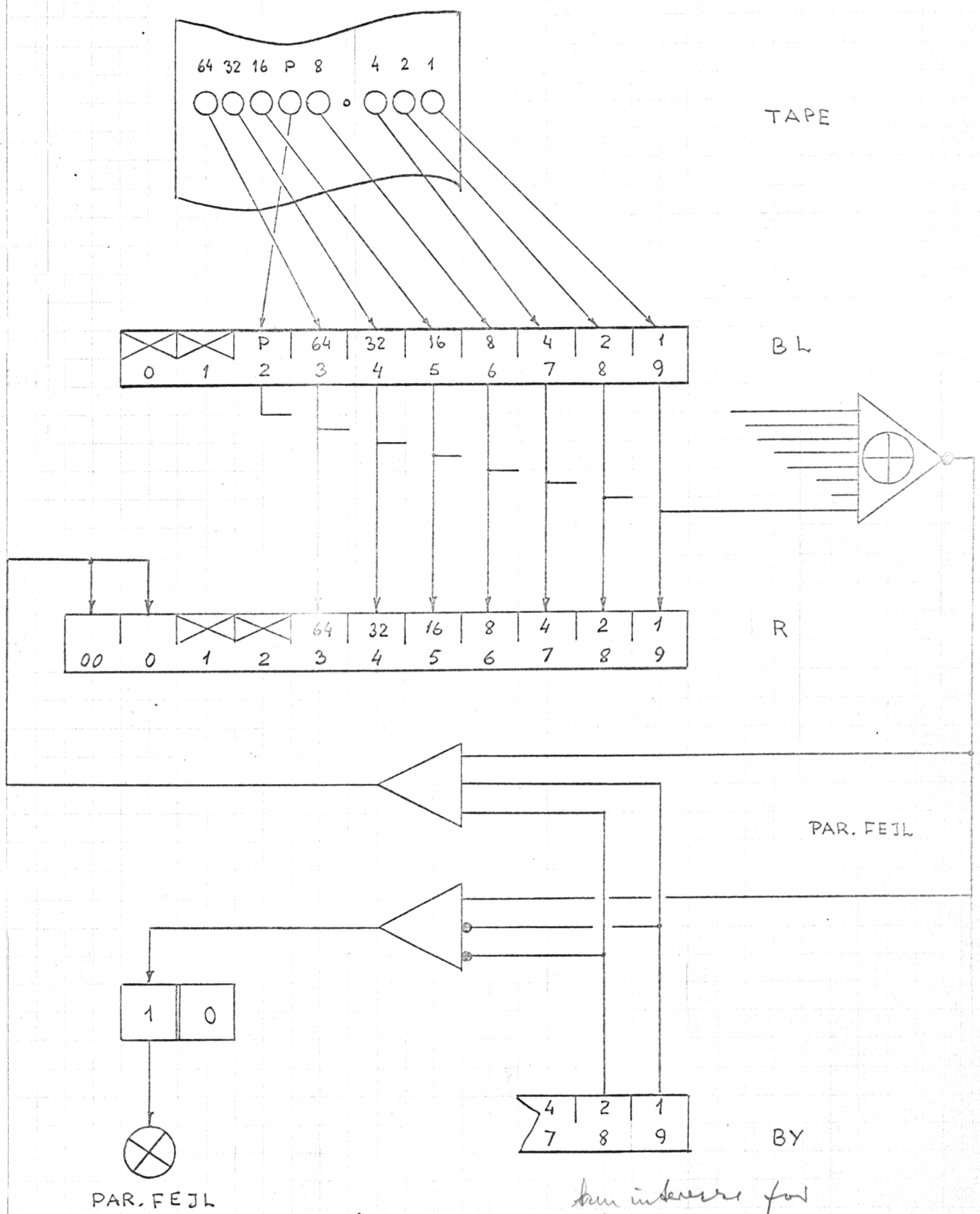

kun interessere for

Vg 0 g Vg 3

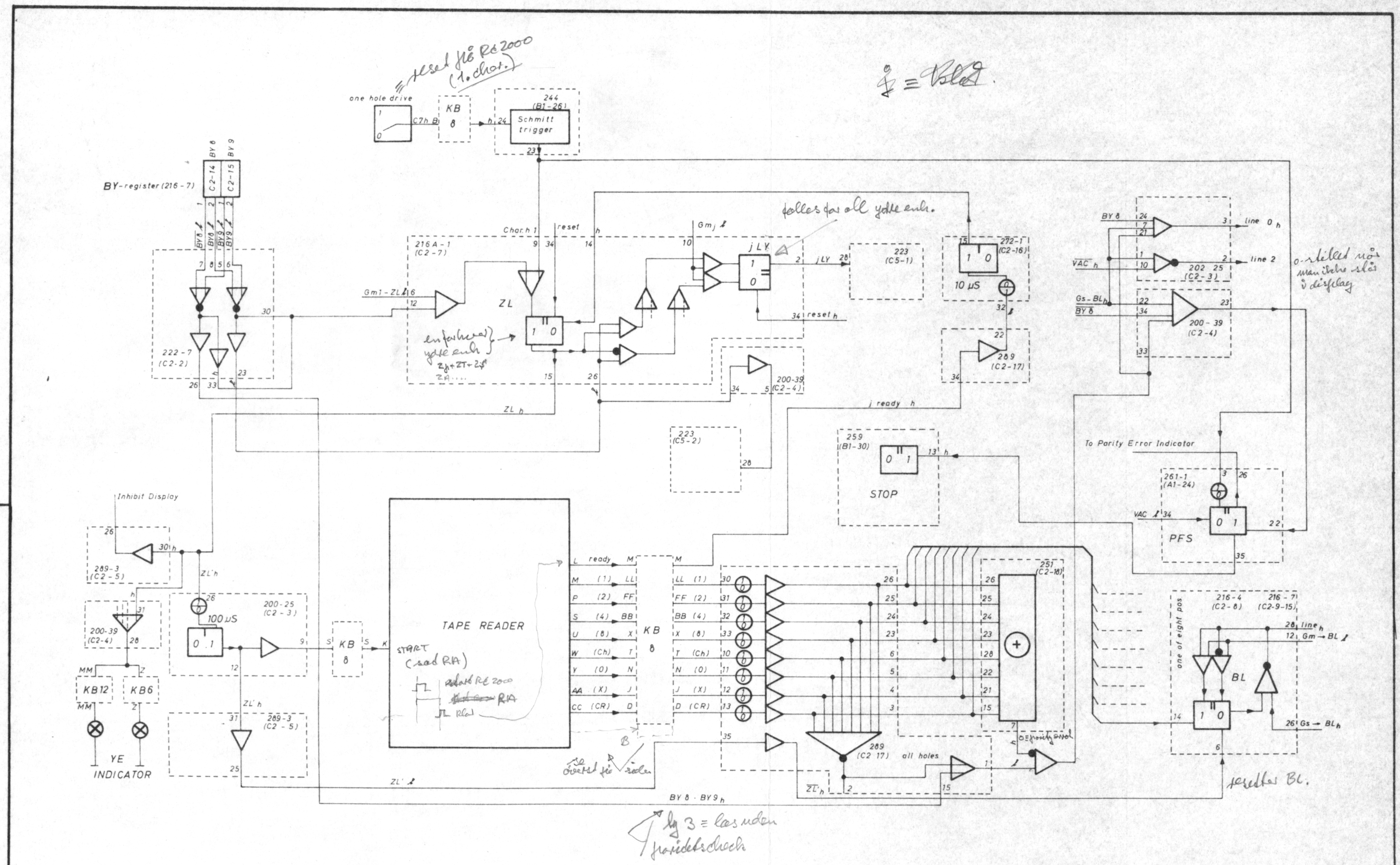

Unit: GIER 6	Designed H.I.	TAPE READER INPUT	Drawing No
REGNE CENTRALEN	Approved		Drawn by P.N. 2.2.66
	Checked 1.2.62		Checked F.E. 26-2-67
	Last Revision		1 Sheets / Sheet 1

8

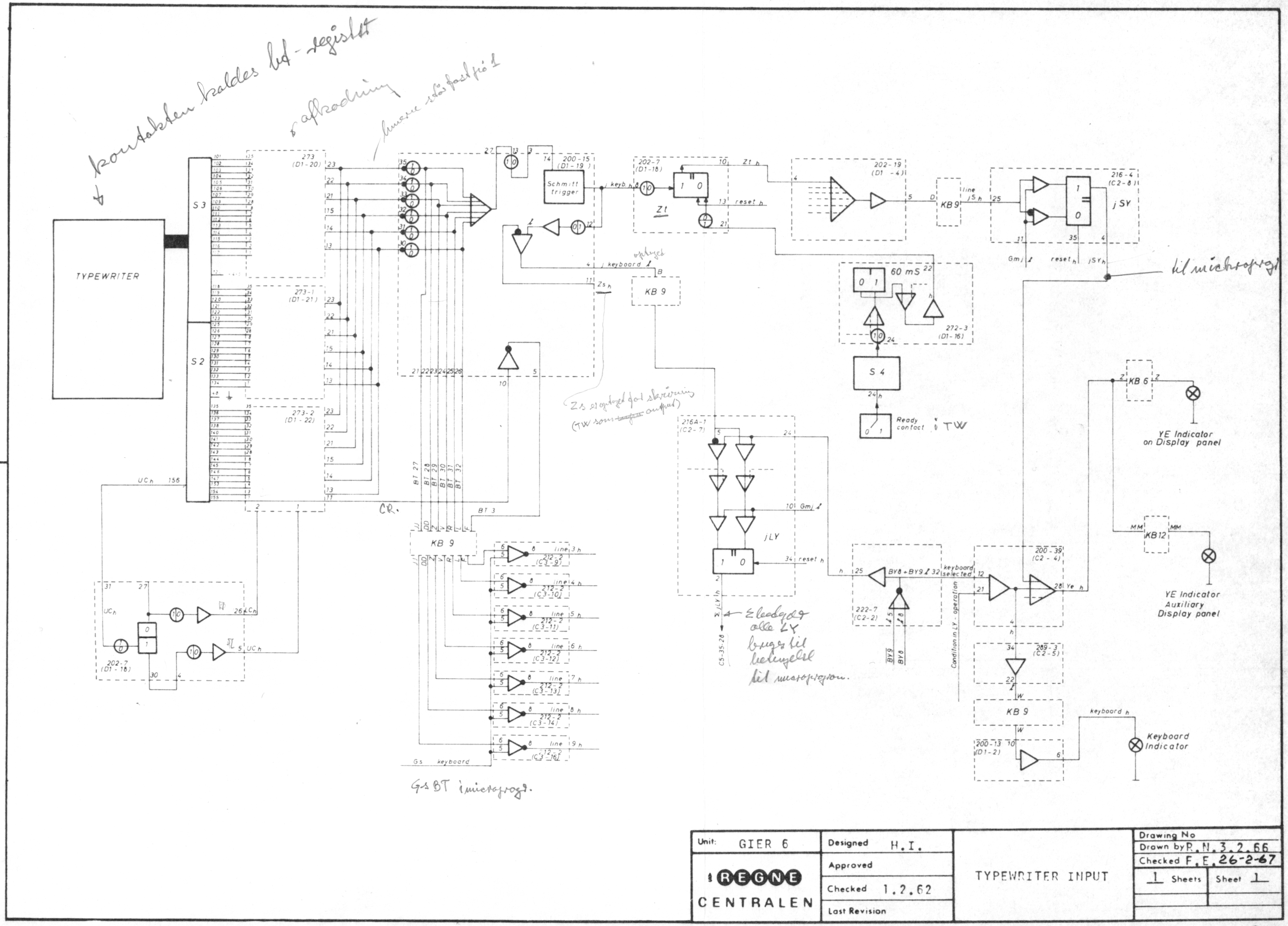

Unit: GIER 6	Designed H.I.	TYPEWRITER INPUT	Drawing No
REGNE CENTRALEN	Approved		Drawn by R.N. 3.2.66
	Checked 1.2.62		Checked F.E. 26-2-67
	Last Revision		1 Sheets / Sheet 1

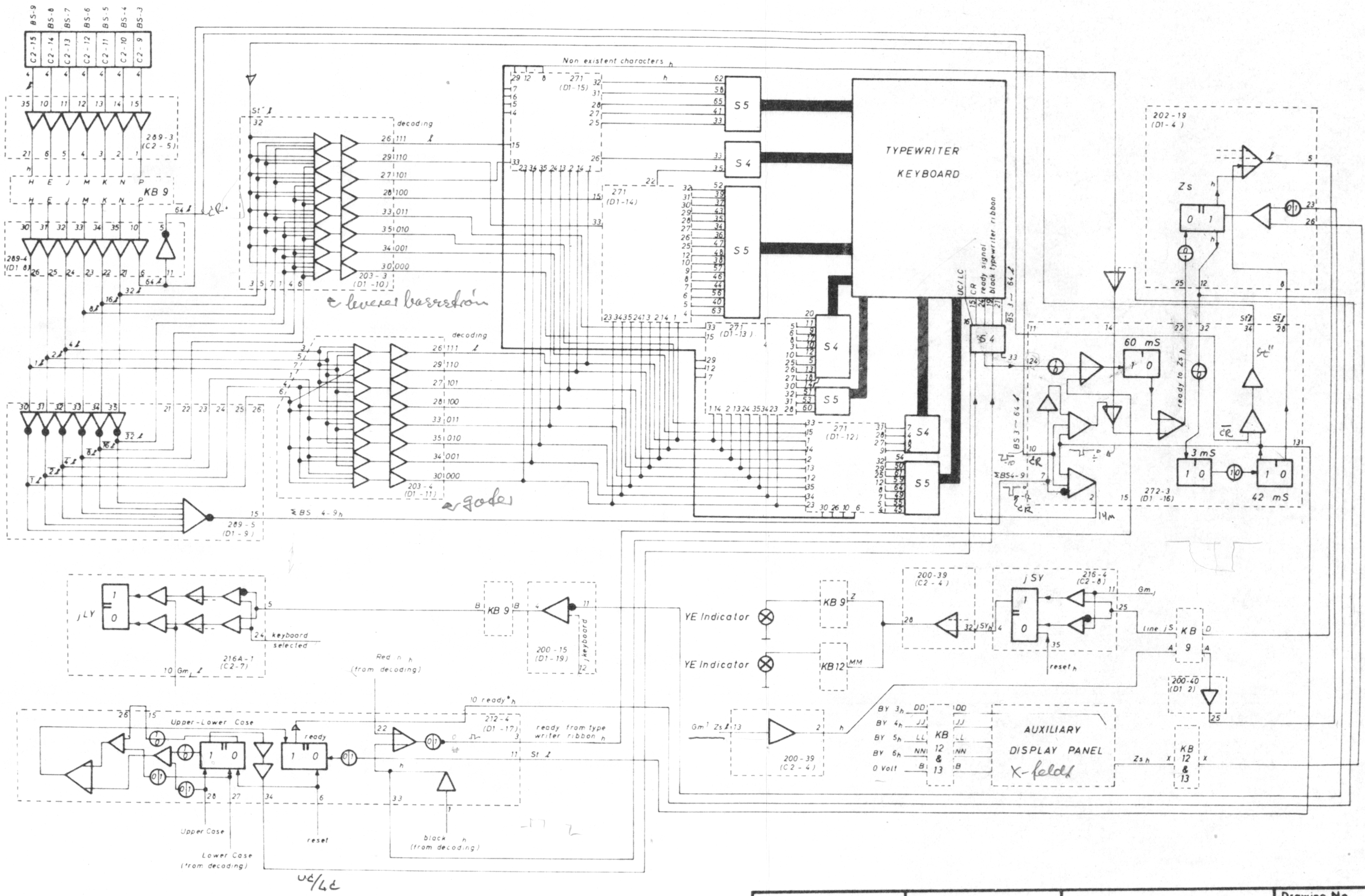

Unit: GIER 6	Designed H.I.	TYPEWRITER OUTPUT	Drawing No
REGNE CENTRALEN	Approved		Drawn by R.N. 8.2.66
	Checked 1.2.62		Checked FE. 26-2-67
	Last Revision		1 Sheets / Sheet 1

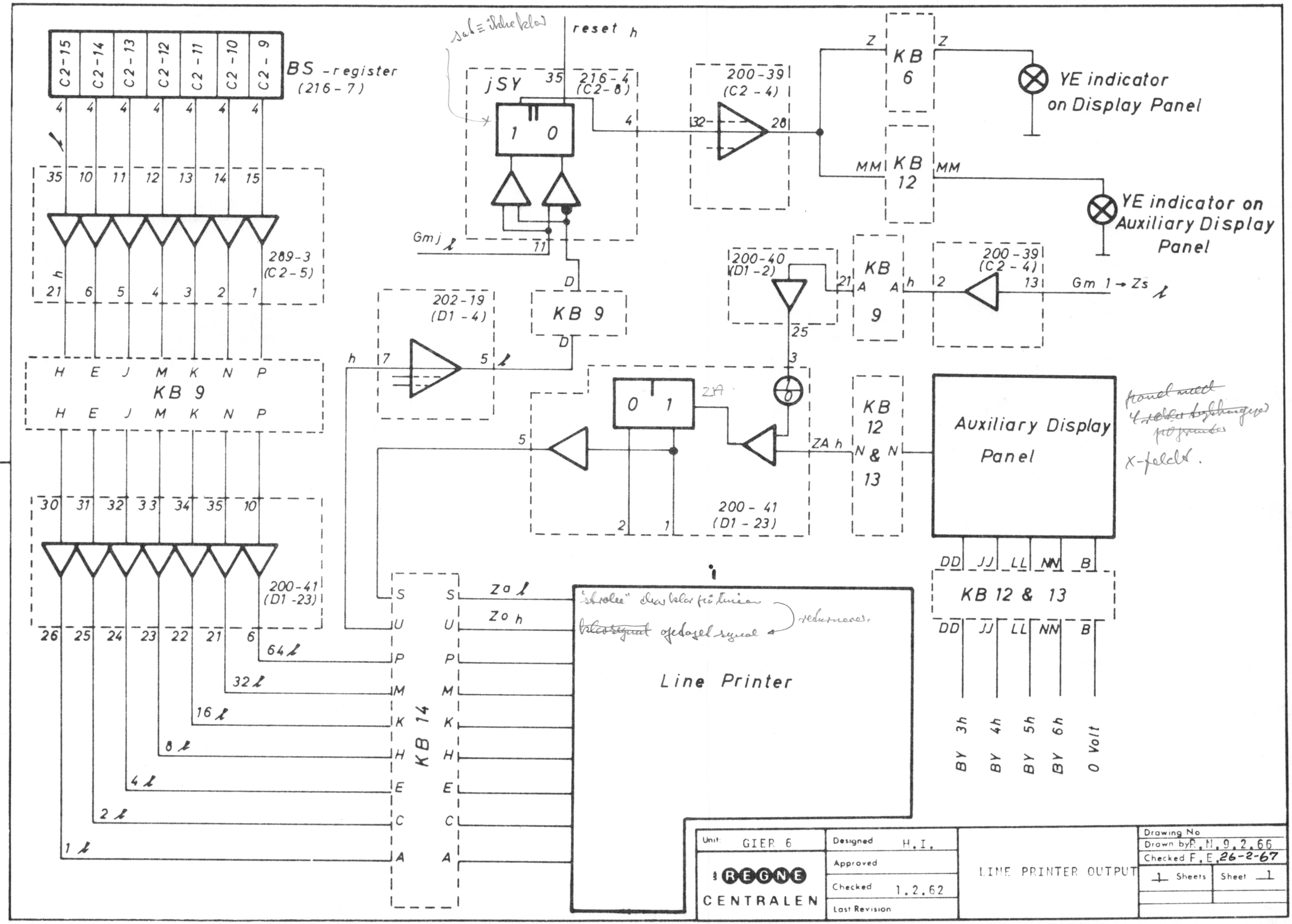

Unit: GIER 6

REGNE CENTRALEN

Designed H.I.

Approved

Checked 1.2.62

Last Revision

LINE PRINTER OUTPUT

Drawing No

Drawn by R.N. 9.2.66

Checked F.E. 26-2-67

1 Sheets | Sheet 1

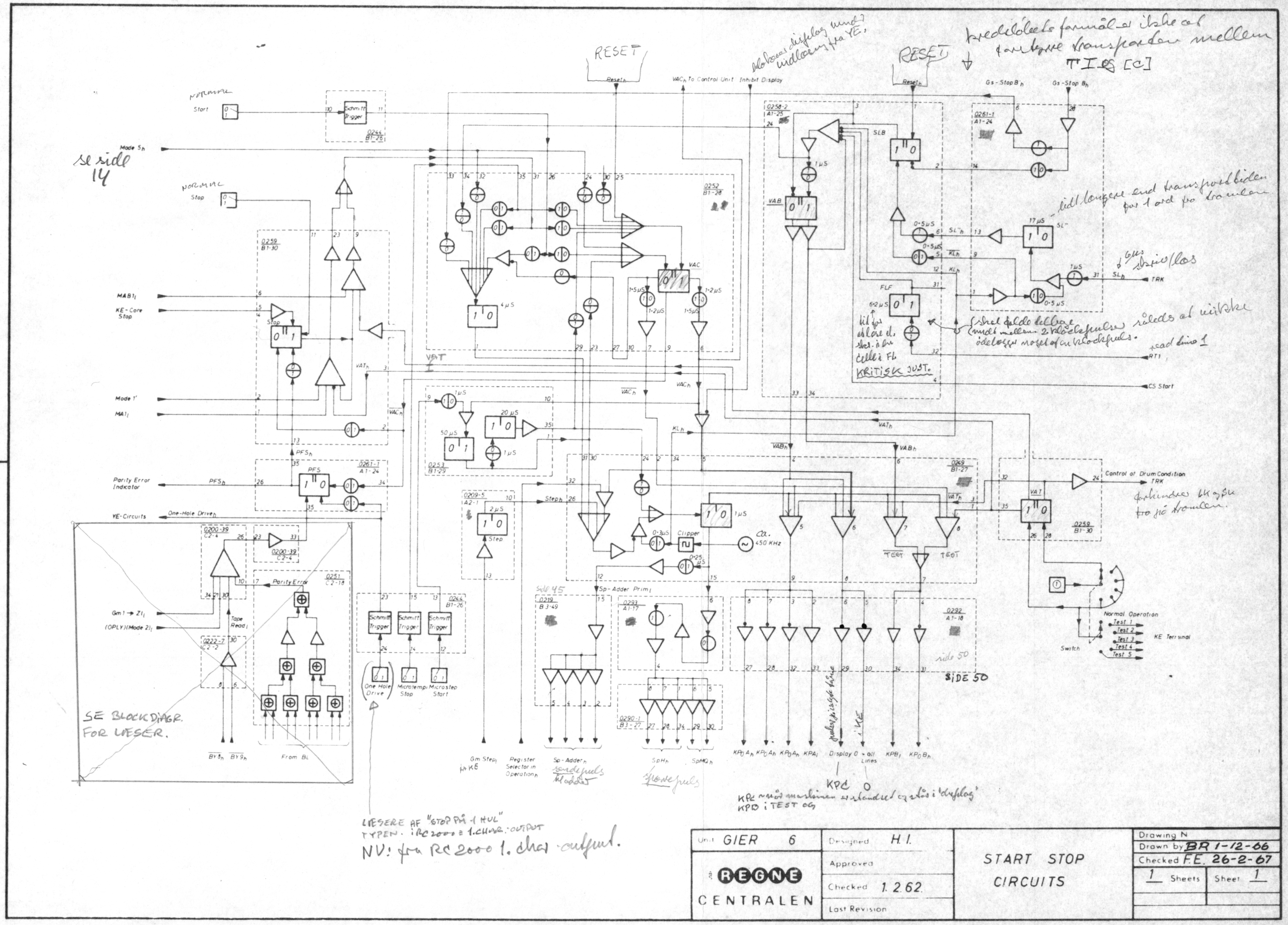

LIESERE AF "STOP PÅ 1 HUL"
TYPEN: iRC2000 = 1.CHAR. OUTPUT
NU: fra RC 2000 1. char. output.

Unit GIER 6	Designed H.I.	START STOP CIRCUITS	Drawing N
REGNE CENTRALEN	Approved		Drawn by BR 1-12-66
	Checked 1.2.62		Checked F.E. 26-2-67
	Last Revision		1 Sheets / Sheet 1

4. Start-stop circuits

The clockpulses from the 450 KHz oscillator are distributed to different parts of the machine controlled by signals from the pushbuttons on the operators panel.

There are in priciple 3 different output-clockpulses:

1. KPA and KP.A which drives the microaddress flip-flops and gates in the control unit during normal operation.

2. KPB and KP.B which drives the special microaddress flip-flops and gates in the control unit during a drumtransfer function.

3. Display and 'zero to all lines' which drives the register-display-system that is active when the machine is stopped. KPC

Besides this there are some special pulses (Sp-adder, SpH and SpMR) which controls the shortterm-memories in the outputs of the adder and the registers H and MR.

The distribution of clockpulses is controlled by means of the flip-flops VAC and VAB.

The flip-flop VAT is only one when the special testmicroprograms are activated by means of the switch in the central processor.

When VAC = 1 the outputgates for the display-system are enabled.
When VAC = 0 the machine is running and gate 5 on card 249 is enabled.
If VAB = 0 gate 5 will send outputpulses and KPA and KP.A will be active. If VAB = 1 gate 5 will be closed and gate 7 open so that KPB and KP.B will be active.

It is seen that if VAC = 1 and VAB = 1 gate 7 will still be active while display is inactive. This means that a drum transfer may be finished after VAC has been set to 1.

The primary clockpulse is interrupted in the following situations: after execution of microoperation Gmstep (1 clockpulse is removed), when VAC or VAB are changing or when pushbuttons are activated.
The logic around VAB is syncronizing the drumoperations and the clock-pulse, and makes sure that a core-memory cycle is not interrupted by the drum.

8. Indicator circuits

The indicator operation is defined by means of the bits OR 33 and OR 34 in the following manner:

OR 33	OR 34	Name		Description
0	0	B_0	I	Storing in indicator
0	1	B_1	M	Marking of cell
1	0	B_2	N	Conditioning of instruction
1	1	B_3	L	- - -

It will be seen that each operation has two names. The names B_0-B_3 are only used in the technical papers. The decoding of the indicator-operation is done by the 'I -afk' on the card 222-2.

The indicator address is defined by means of the bits OR35 - OR39. The first 3 bits are decoded by means of the 'IA-afk' on the cards 222-1 in the following manner:

OR 35	OR 36	OR 37	Name	Description
0	0	0	N	Zerokombination
0	0	1	K	Push buttons on control panel
0	1	0	W or Z	Zero status of the R-gister
0	1	1	O	Overflow
1	0	0	T	Sign
1	0	1	P	Marking bits
1	1	0	Q	- -
1	1	1	R	- -

The two last bits of the address are used in the following manner:

OR 38	OR 39	Name
0	0	Zerokombination
1	0	A
0	1	B
1	1	C

The Indicator-register IN consists of 12 flip-flops with the names:
OA, OB, TA, TB, PA, PB, QA, QB, RA, RB, KA and KB.
The 10 first are connected to the busline-system and are placed upon the circuit cards 216-1. KA and KB can only be set manually from the control panel and are placed upon the card 200-5.

The specific functions of the indicator-logic are described in full detail in 'A Manual of GIER Programming', vol 1, page 90-95.

Conditioning of an instruction by means of indicatoroperations N or L is performed by a group of logic circuits which gives the outputsignal B.
If B = 1 the condition is fulfilled and the instruction will be executed.
This logic is placed upon the cards 233 and 200-9. The Boolean expression for B can be written in this way:

$$
\begin{aligned}
B = \quad & (\overline{N} + \overline{B}_3 \cdot \overline{H}_{40} + B_3 \cdot H_{40} + \overline{OR}_{38})(\overline{N} + \overline{B}_3 \cdot \overline{H}_{41} + B_3 \cdot H_{41} + \overline{OR}_{39}) \cdot && 11\,;\,12\\
& (\overline{K} + \overline{B}_3 \cdot \overline{K}_A + B_3 \cdot K_A + \overline{OR}_{38})(\overline{K} + \overline{B}_3 \cdot \overline{K}_B + B_3 \cdot K_B + \overline{OR}_{39}) \cdot && 5\,;\,6\\
& (\overline{W} + \overline{B}_3 \cdot \overline{O}_A + B_3 \cdot O_A + \overline{OR}_{38})(\overline{W} + \overline{B}_3 \cdot \overline{O}_B + B_3 \cdot O_B + \overline{OR}_{39}) \cdot && 7\,;\,8\\
& (\overline{W} + \overline{B}_3 \cdot \overline{w} + B_3 \cdot w + OR_{38} + OR_{39}) \cdot && 1\,;\,-\\
& (\overline{O} + \overline{B}_3 \cdot \overline{O}_A + B_3 \cdot O_A + \overline{OR}_{38})(\overline{O} + \overline{B}_3 \cdot \overline{O}_B + B_3 \cdot O_B + \overline{OR}_{39}) \cdot && 17\,;\,18\\
& (\overline{O} + \overline{B}_3 \cdot \text{overflow in AC} + B_3 \cdot \overline{\text{overflow in AC}} + OR_{38} + OR_{39}) \cdot && 3\,;\,-\\
& (\overline{T} + \overline{B}_3 \cdot \overline{T}_A + B_3 \cdot T_A + \overline{OR}_{38})(\overline{T} + \overline{B}_3 \cdot \overline{T}_B + B_3 \cdot T_B + \overline{OR}_{39}) \cdot && 19\,;\,20\\
& (\overline{T} + \overline{B}_3 \cdot \overline{AC}_{00} + B_3 \cdot AC_{00} + OR_{38} + OR_{39}) \cdot (OR\,39 + OR\,38 + B3 + \overline{B3}) && 2\,;\,4\\
& (\overline{P} + \overline{B}_3 \cdot \overline{P}_A + B_3 \cdot P_A + \overline{OR}_{38})(\overline{P} + \overline{B}_3 \cdot \overline{P}_B + B_3 \cdot P_B + \overline{OR}_{39}) \cdot && 13\,;\,14\\
& (\overline{Q} + \overline{B}_3 \cdot \overline{Q}_A + B_3 \cdot Q_A + \overline{OR}_{38})(\overline{Q} + \overline{B}_3 \cdot \overline{Q}_B + B_3 \cdot Q_B + \overline{OR}_{39}) \cdot && 15\,;\,16\\
& (\overline{R} + \overline{B}_3 \cdot \overline{R}_A + B_3 \cdot R_A + \overline{OR}_{38})(\overline{R} + \overline{B}_3 \cdot \overline{R}_B + B_3 \cdot R_B + \overline{OR}_{39}) \cdot && 9\,;\,10
\end{aligned}
$$



In the case that indicatoroperation L is used then we have B 3 = 1. For operation N we have B 3 = 0 in the expression. By selecting an address f.ex. P, we have P = 1 and $\overline{P}$ = 0. This means that only the paranthes containing $\overline{P}$ is interesting, because all other addresses N, K, W, O, T, [illegible] and R = 0 that is $\overline{N}$, $\overline{K}$, $\overline{W}$, ... $\overline{R}$ = 1 so that all the rest of the parantheses are equal to 1. The expression simplifies in this case

For B 3 = 1 to B = (PA + $\overrightarrow{OR}_{38}$) (PB + $\overline{OR}_{39}$) and

for B 2 = 1 to B = ($\overline{PA}$ + $\overline{OR}_{38}$) ($\overline{PB}$ + $\overline{OR}_{39}$).

INDIKATOREN

Logisk afkodning.

Man benytter sig af en "loddeklats-adder", da man skifter fra lov til høj representation af logisk "1". Da der således er 2 forskellige outputs pr plade, men på samme ben, benævnes benene med Ø og N (ovre og nedre)

Betingelse for "1" på linie 40' $\boxed{\Rightarrow H40=0}$

233 (C1-22) pin 24 Ø $= (\overline{K} + \overline{B_3} \cdot \overline{K_A} + B_3 \cdot K_A + \overline{OR_{38}}) \cdot \equiv$ "1"

-"- (-"-) pin 24 N $= (\overline{W} + \overline{B_3} \cdot \overline{O_A} + B_3 \cdot O_A + \overline{OR_{38}}) \cdot \equiv$ "1"

233 (C1-23) pin 24 Ø $= (\overline{R} + \overline{B_3} \cdot \overline{R_A} + B_3 \cdot R_A + \overline{OR_{38}}) \cdot \equiv$ "1"

-"- (-"-) pin 24 N $= (\overline{N} + \overline{B_3} \cdot \overline{H_{40}} + B_3 \cdot H_{40} + \overline{OR_{38}}) \cdot \equiv$ "1"

233 (C1-24) pin 24 Ø $= (\overline{P} + \overline{B_3} \cdot \overline{P_A} + B_3 \cdot P_A + \overline{OR_{38}}) \cdot \equiv$ "1"

-"- (-"-) pin 24 N $= (\overline{Q} + \overline{B_3} \cdot \overline{Q_A} + B_3 \cdot Q_A + \overline{OR_{38}}) \cdot \equiv$ "1"

233 (C1-25) pin 24 Ø $= (\overline{O} + \overline{B_3} \cdot \overline{O_A} + B_3 \cdot O_A + \overline{OR_{38}}) \cdot \equiv$ "1"

-"- (-"-) pin 24 N $= (\overline{T} + \overline{B_3} \cdot \overline{T_A} + B_3 \cdot T_A + \overline{OR_{38}}) \equiv$ "1"

Betingelse for "1" på linie 41' $\boxed{\Rightarrow H41=0}$

233 (C1-22) pin 21 Ø $= (\overline{K} + \overline{B_3} \cdot \overline{K_B} + B_3 \cdot K_B + \overline{OR_{39}}) \cdot \equiv$ "1"

-"- (-"-) pin 21 N $= (\overline{W} + \overline{B_3} \cdot \overline{O_B} + B_3 \cdot O_B + \overline{OR_{39}}) \cdot \equiv$ "1"

233 (C1-23) pin 21 Ø $= (\overline{R} + \overline{B_3} \cdot \overline{R_B} + B_3 \cdot R_B + \overline{OR_{39}}) \cdot \equiv$ "1"

-"- (-"-) pin 21 N $= (\overline{N} + \overline{B_3} \cdot \overline{H_{41}} + B_3 \cdot H_{41} + \overline{OR_{39}}) \cdot \equiv$ "1"

233 (C1-24) pin 21 Ø $= (\overline{P} + \overline{B_3} \cdot \overline{P_B} + B_3 \cdot P_B + \overline{OR_{39}}) \cdot \equiv$ "1"

-"- (-"-) pin 21 N $= (\overline{Q} + \overline{B_3} \cdot \overline{Q_B} + B_3 \cdot Q_B + \overline{OR_{39}}) \cdot \equiv$ "1"

233 (C1-25) pin 21 Ø $= (\overline{O} + \overline{B_3} \cdot \overline{O_B} + B_3 \cdot O_B + \overline{OR_{39}}) \cdot \equiv$ "1"

-"- (-"-) pin 21 N $= (\overline{T} + \overline{B_3} \cdot \overline{T_B} + B_3 \cdot T_B + \overline{OR_{39}}) \equiv$ "1"

Betingelse for at få B

For at få B ≡ betingelsen opfyldt, må linie 40' = 41' = "1"
dvs. alle betingelser på foregående side må vare "1"
Envidere må outputtet på plade 233 (C1-21) (den
øverste i rokken) vare 1 ⇒

$$233(C1\text{-}21)\ 24\emptyset = (\overline{W} + \overline{B_3} \cdot \overline{w} + B_3 \cdot w + OR_{38} + OR_{39}) \cdot \equiv \text{"1"}$$

$$\text{—"—} \quad \text{—"—} \quad 24N = (\overline{O} + \overline{B_3} \cdot \text{overflow in AC} + B_3 \cdot \overline{\text{overflow in AC}} + OR_{38} + OR_{39}) \cdot \equiv \text{"1"}$$

$$\text{—"—} \quad \text{—"—} \quad 21\emptyset = (\overline{T} + \overline{B_3} \cdot \overline{AC_{00}} + B_3 \cdot AC_{00} + OR_{38} + OR_{39}) \cdot \equiv \text{"1"}$$

$$\text{—"—} \quad \text{—"—} \quad 21N = (OR_{39} + OR_{38} + B_3 + \overline{B_3}) \equiv \text{"1"}$$

Funktionen w stammer fra (AC) = 0, W fra OR-afk.

Betingelse for at få "1" henhv "0" stillet indikator ff.

OA { "1" $(w \cdot W + S \cdot 0) \cdot (B_0 \cdot OR_{38} \cdot G_m I_0)$
"0" $(\overline{w} \cdot W + \overline{S} \cdot 0) \cdot ($ —"— $)$

OB { "1" $(w \cdot W + S \cdot 0) \cdot (B_0 \cdot OR_{39} \cdot G_m I_0)$
"0" $(\overline{w} \cdot W + \overline{S} \cdot 0) \cdot ($ —"— $)$

TA { "1" $H_{00} \cdot T \cdot B_0 \cdot OR_{38} \cdot G_m I_0$
"0" $\overline{H_{00}} \cdot$ —"—

TB { "1" $H_{00} \cdot T \cdot B_0 \cdot OR_{39} \cdot G_m I_0$
"0" $\overline{H_{00}} \cdot$ —"—

FORTS. →

PA { "1" $H_{40} \cdot P \cdot B_0 \cdot OR_{38} \cdot GmI_0$; "0" $\overline{H_{40}} \cdot$ ——"——

PB { "1" $H_{41} \cdot P \cdot B_0 \cdot OR_{39} \cdot GmI_0$; "0" $\overline{H_{41}} \cdot$ ——"——

QA { "1" $H_{40} \cdot Q \cdot B_0 \cdot OR_{38} \cdot GmI_0$; "0" $\overline{H_{40}} \cdot$ ——"——

QB { "1" $H_{41} \cdot Q \cdot B_0 \cdot OR_{39} \cdot GmI_0$; "0" $\overline{H_{41}} \cdot$ ——"——

RA { "1" $H_{40} \cdot R \cdot B_0 \cdot OR_{38} \cdot GmI_0$; "0" $\overline{H_{40}} \cdot$ ——"——

RB { "1" $H_{41} \cdot R \cdot B_0 \cdot OR_{39} \cdot GmI_0$; "0" $\overline{H_{41}} \cdot$ ——"——

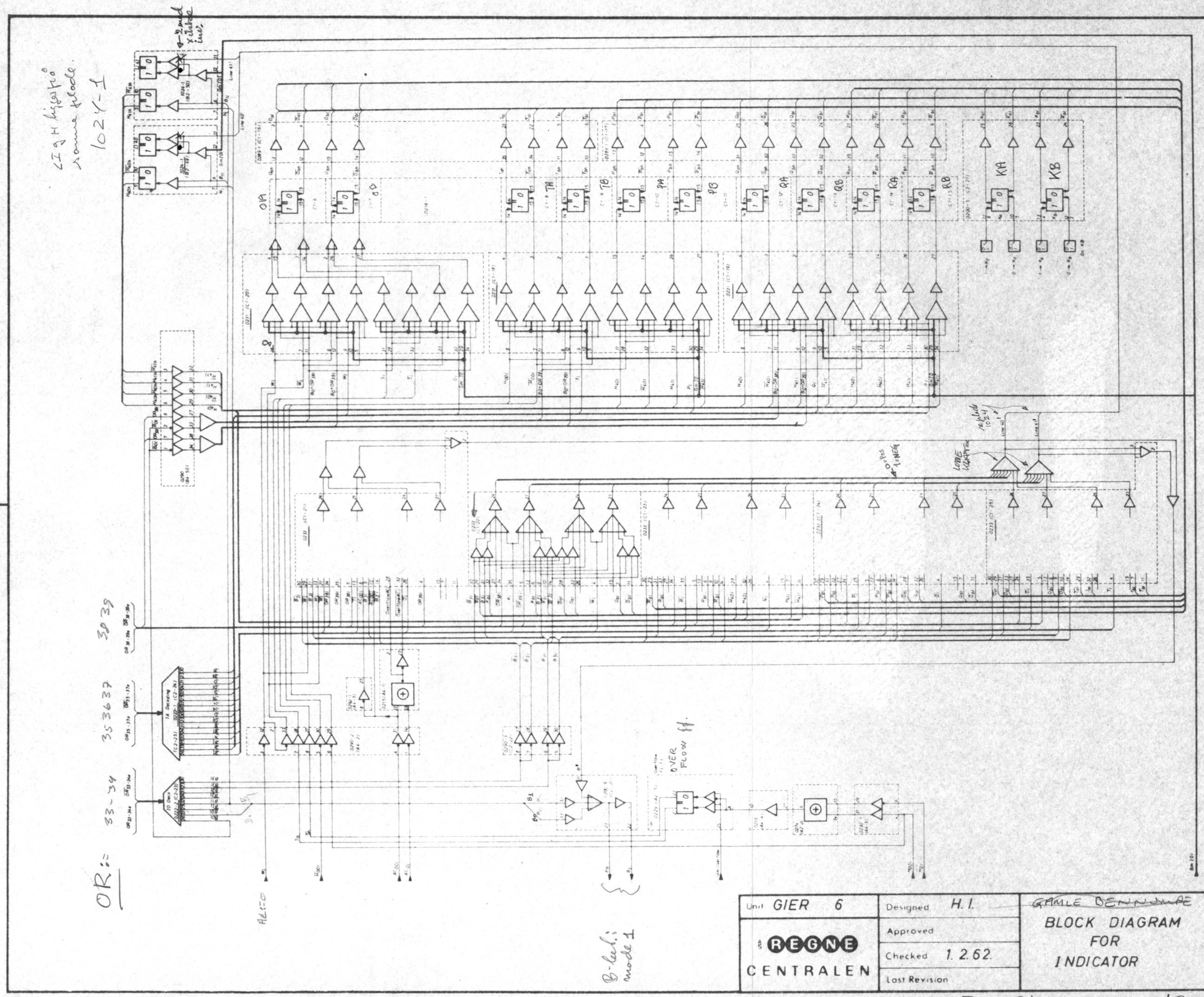

Unit GIER 6	Designed H.I.	~~GAMLE BENNUMPE~~ BLOCK DIAGRAM FOR INDICATOR	Drawing No
REGNE CENTRALEN	Approved		Drawn by BR 7-12-66
	Checked 1.2.62.		Checked F.E. 26-2-67
	Last Revision		1 Sheets Sheet 1

SE BESKRIVELSE NÆSTE SIDE.

STATISK TEST AF INDIKATOREN

Alle positions- og pinnumre gælder for GIER Serie 6 f.f.

1. Betingede ordrer (L- og N-betingede operationer)

Oscilloscop på C1-25-2. Bitmønstrene for de efterfølgende betingelser sættes manuelt i F-registeret (OR). Betingelsen testes ved at skifte de anførte bits.

a. LO Test af overløb	Må ændres ved udførsel af passede ordrer.
LOA	OA:=1 og OA:=0
LOB	OB:=1 og OB:=0
LOC	OA:=OB:=0 og OA:=OB:=1
b. LZ Test af AC=0	R:=0 og R:=1
LZA	OA:=0 og OA:=1
LZB	OB:=0 og OB:=1
LZC	OA:=OB:=0 og OA:=OB:=1
c. LT Test af R_{00}	T:=0 og T:=1
LTA	TA:=0 og TA:=1
LTB	TB:=0 og TB:=1
LTC	TA:=TB:=0 og TA:=TB:=1
c. LA Test af R_{40}	R_{40}:=0 og R_{40}:=1
LB Test af R_{41}	R_{41}:=0 og R_{41}:=1
LC Test af R_{40} og R_{41}	$R_{40,41}$:=(00,01,10,11)
d. LPA	PA:=0 og PA:=1
LPB	PB:=0 og PB:=1
LPC	PA:=PB:=0 og PA:=PB:=1
e. LQA	QA:=0 og QA:=1
LQB	QB:=0 og QB:=1
LQC	QA:=QB:=0 og QA:=QB:=1
f. LRA	RA:=0 og RA:=1
LRB	RB:=0 og RB:=1
LRC	RA:=RB:=0 og RA:=RB:=1
g. LKA	KA:=o og KA:=1
LKB	KB:=0 og KB:=1
LKC	KA:=KB:=0 og KA:=KB:=1
h. NO Test af overløb	Må ændres af passende ordrer
NOA	OA:=1 og OA:=0
NOB	OB:=1 og OB:=0
NOC	OA:=OB:=1 og OA:=OB:=0
i. NZ Test af AC≠0	R:=1 og R:=0
NZA	OA:=1 og OA:=0
NZB	OB:=1 og OB:=0
NZC	OA:=OB:=1 og OA:=OB:=0
j. NT Test of R_{00}	T:=0 og T:=1
NTA	TA:=1 og TA:=0
NTB	TB:=1 og TB:=0
NTC	TA:=TB:=1 og TA:=TB:=0

k.	NA Test af R_{40}	R_{40}:=1 og R_{40}:=0
	NB Test af R_{41}	R_{41}:=1 og R_{41}:=1
	NC Test af R_{40} og R_{41}	$R_{40,41}$:=(00,01,10,11)
l.	NPA	PA:=1 og PA:=0
	NPB	PB:=1 og PB:=0
	NPC	PA:=PB:=1 og PA:=PB:=0
m.	NQA	QA:=1 og QA:=0
	NQB	QB:=1 og QB:=0
	NQC	QA:=QB:=1 og QA:=QB:=0
n.	NRA	RA:=1 og RA:=0
	NRB	RB:=1 og RB:=0
	NRC	RA:=RB:=1 og RA:=RB:=0
o.	NKA	KA:=1 og KA:=0
	NKB	KB:=1 og KB:=0
	NKC	KA:=KB:=1 og KA:=KB:=0

2. Mærkeoperationer (M-betingede operationer)

Køres ♿ TEST 5. Bitmønster for M-operation sættes i O-register(MD). De genererede mærkebits checkes i L-registeret(LI).Efter Microstop indsættes aktuelt bitmønster og passende indhold i indikatoren eller $R_{40,41}$.Efter tryk på Normal Start checkes LI.

			LI_{40}	LI_{41}
a.	M	Absolut mærkning	0	0
	MA	"	1	0
	MB	"	0	1
	MC	"	1	1
b.	MOA		OA	
	MOB			OB
	MOC		OA	OB
c.	MTA		TA	
	MTB			TB
	MTC		TA	TB
d.	MPA		PA	
	MPB			PB
	MPC		PA	PB
e.	MQA		QA	
	MQB			QB
	MQC		QA	QB
f.	MRA		RA	
	MRB			RB
	MRC		RA	RB
g.	MKA		KA	
	MKB			KB
	MKC		KA	KB

3. Indicering af overløb

Overløb frembringes ved at udføre programmet:

```
arn r+1   V
0.75
ar  r-1 , zq
```

Efter valg af TEST 5 testes som under punkt 2 IOA,IOB,IOC , hvorefter overløb fjernes ved (i NORMAL GANG) at udføre ordren:

```
arn r+1 , zq
qq 0.39
```

Efter valg af TEST 5 testes indicering af manglende overløb.

Operation	med overløb		uden overløb	
	OA	OB	OA	OB
IOA	1	-	0	-
IOB	-	1	-	0
IOC	1	1	0	0

4. Indicering af nulsituation i AC

Testes ved at skifte indholdet i R fra 0 til ikke 0. En enkelt bit skal være nok til at ændre situationen. TEST 5 bruges til testen.

Operation	AC=0		AC≠0	
	OA	OB	OA	OB
IZA	1	-	0	-
IZB	-	1	-	0
IZC	1	1	0	0

5. Indicering af fortegn for H

Fortegnet er position 00 i H-registeret og kan nulstilles of etstilles på kortet A3-5.

Etstilling: pin 5 til 0V
Nulstilling: pin 10 til 0V

TEST 5 bruges til operationen.

Operation	$H_{00}=1$		$H_{00}=0$	
	TA	TB	TA	TB
ITA	1	-	0	-
ITB	-	1	-	0
ITC	1	1	0	0

6. Indicering af Rs mærkebits

TEST 5 bruges. Mærkebits sættes i R-registeret(AC) position 40 og 41. Den aktuelle operation indsættes i O-registerets positioner 33-39 og det modsatte af de forventede mærkebits i O-registerets positioner 0-9, idet 0-9 overføres til indikatoren i første mikrotrin af TEST 5.

Operation	Indikatorindhold ved $R_{40}=R_{41}=1$	Indikatorindhold ved $R_{40}=R_{41}=0$
IPA	PA=1	PA=0
IPB	PB=1	PB=0
IPC	PA=PB=1	PA=PB=0
IQA	QA=1	QA=0
IQB	QB=1	QB=0
IQC	QA=QB=1	QA=QB=0
IRA	RA=1	RA=0
IRB	RB=1	RB=0
IRC	RA=RB=1	RA=RB=0

7. Ombytning af p-register og indikator

Ombytning testes i NORMAL GANG. Ordren

qq IK

indsættes i en vilkårlig celle og tælling i OT blokeres via switchen på A4-3. Derefter sættes indikatoren=0 og p-registeret(OR 0-9)=1o23. Indholdet af p og indikator skal da skifte som følger:

	p	In
Efter NORMAL START:	0	1023
ordren ændres til qq IKA		
Efter NORMAL START:	1023	0
ordren ændres til qq IKB		
Efter NORMAL START:	0	1023
ordren ændres til qq IKC		
Efter NORMAL START:	1023	0

Herefter er testen færdig

JFM/4.7.1968

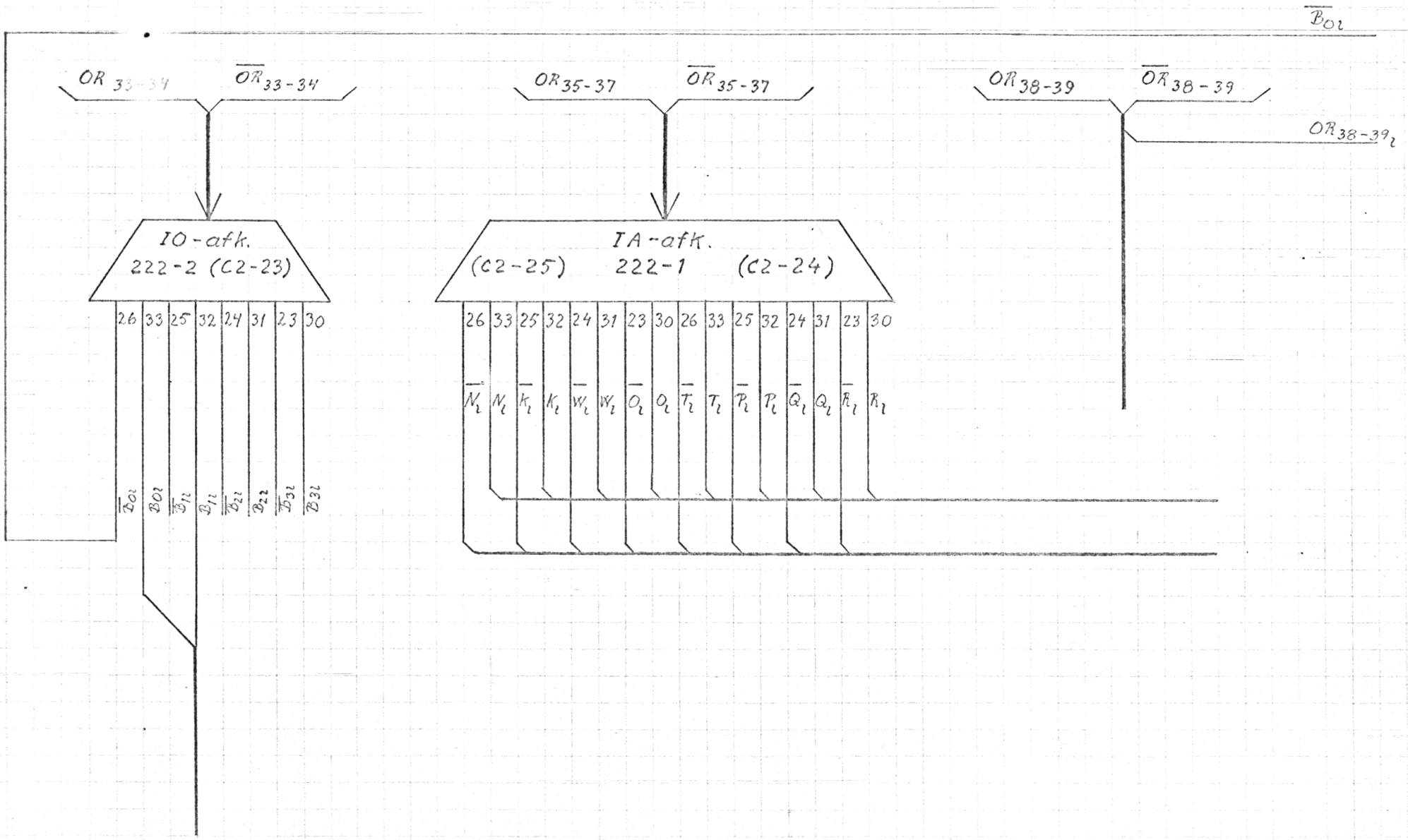
$\overline{B_{01}}$
OR_{33-34}
$\overline{OR}_{33-34}$
OR_{35-37}
$\overline{OR}_{35-37}$
OR_{38-39}
$\overline{OR}_{38-39}$
OR_{38-39_1}
IO-afk.
222-2 (C2-23)
IA-afk.
(C2-25) 222-1 (C2-24)
26 33 25 32 24 31 23 30
26 33 25 32 24 31 23 30 26 33 25 32 24 31 23 30
$\overline{B_{01}}$ B_{01} $\overline{B_{11}}$ B_{11} $\overline{B_{21}}$ B_{21} $\overline{B_{31}}$ B_{31}
$\overline{N_1}$ N_1 $\overline{K_1}$ K_1 $\overline{W_1}$ W_1 $\overline{O_1}$ O_1 $\overline{T_1}$ T_1 $\overline{P_1}$ P_1 $\overline{Q_1}$ Q_1 $\overline{R_1}$ R_1

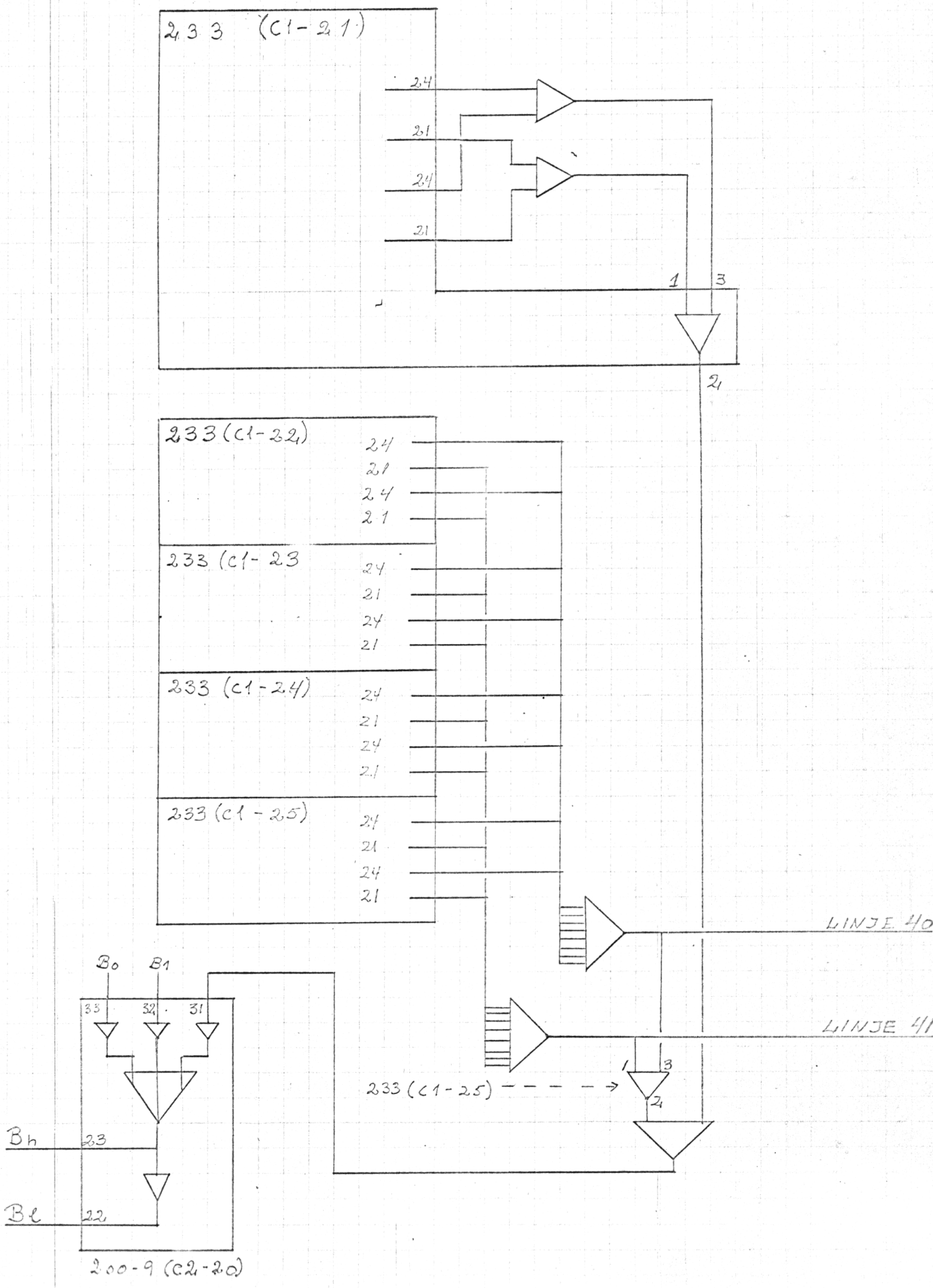
233 (C1-21)
24
21
24
21
1
3
21
233(C1-22)
24
21
24
21
233 (C1-23
24
21
24
21
233 (C1-24)
24
21
24
21
233 (C1-25)
24
21
24
21
LINJE 40
LINJE 41
B0
B1
33
32
31
Bh
23
Bl
22
200-9 (C2-20)
233 (C1-25)
1
3
21

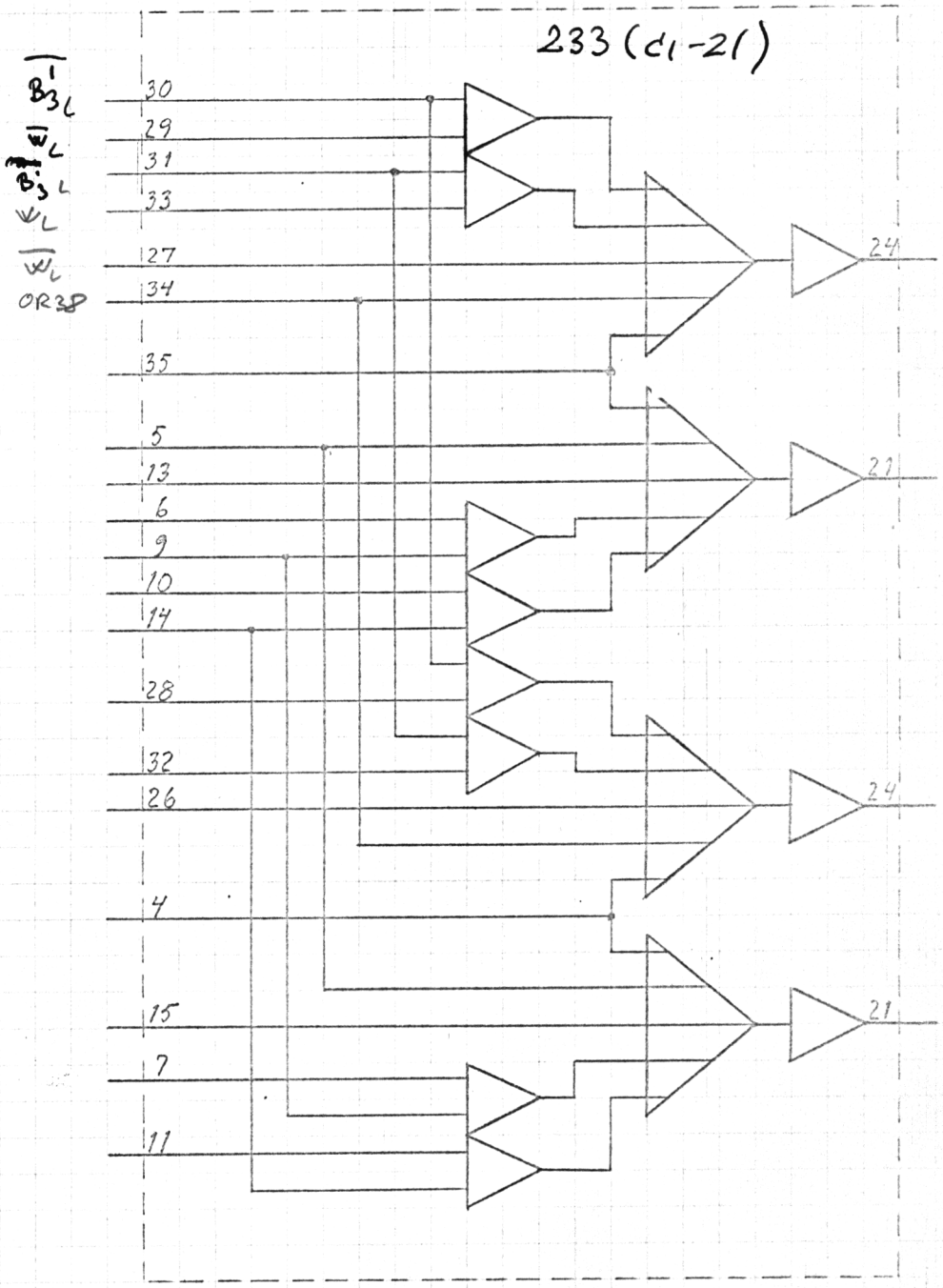
233 (d1-21)
$\overline{B'_{3L}}$
$\overline{W_L}$
$\overline{B'_{3L}}$
W_L
$\overline{W_L}$
OR38
30
29
31
33
27
34
35
5
13
6
9
10
14
28
32
26
4
15
7
11
24
21
24
21

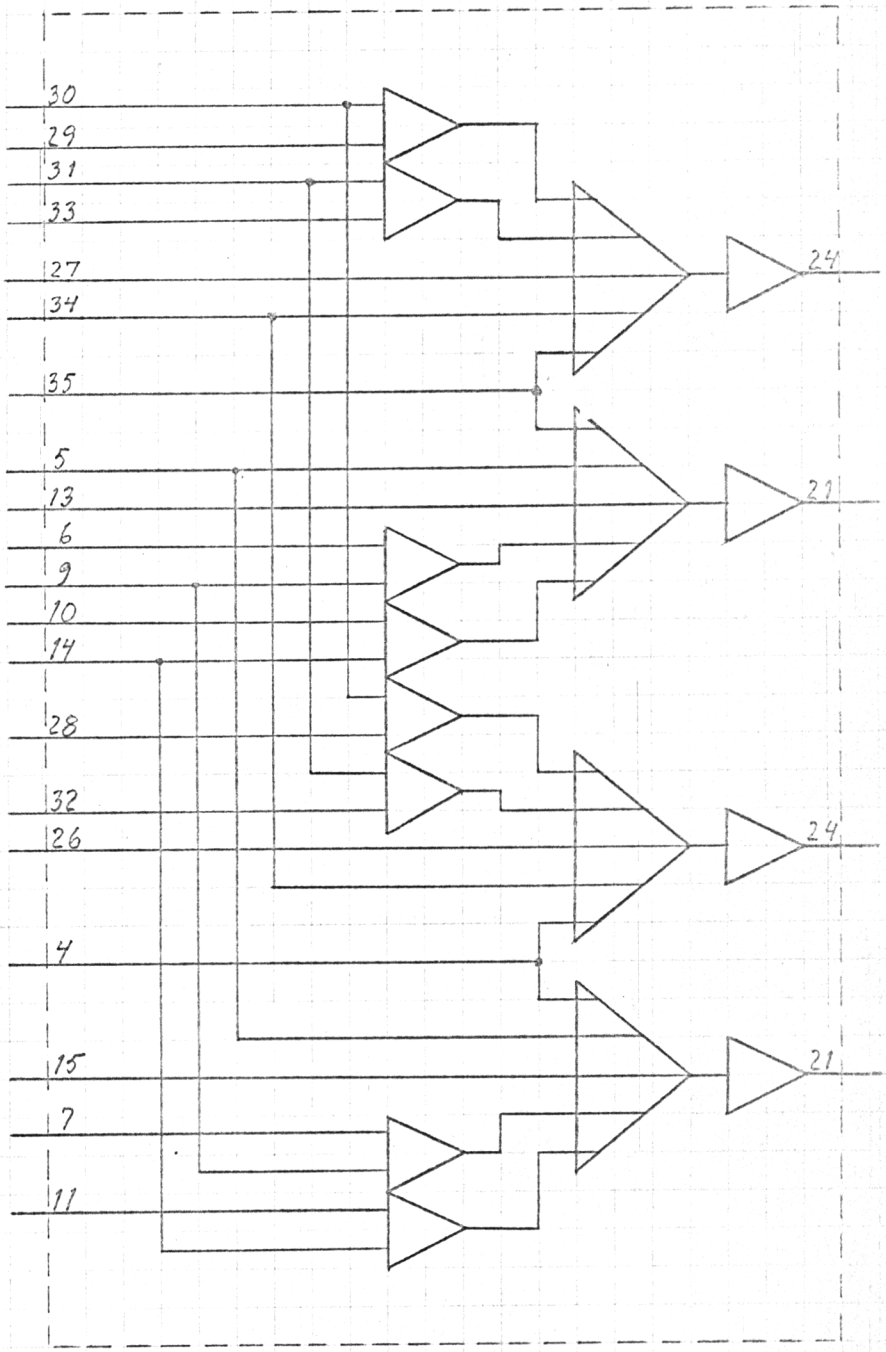
30
29
31
33
27
34
35
5
13
6
9
10
14
28
32
26
4
15
7
11
24
21
24
21

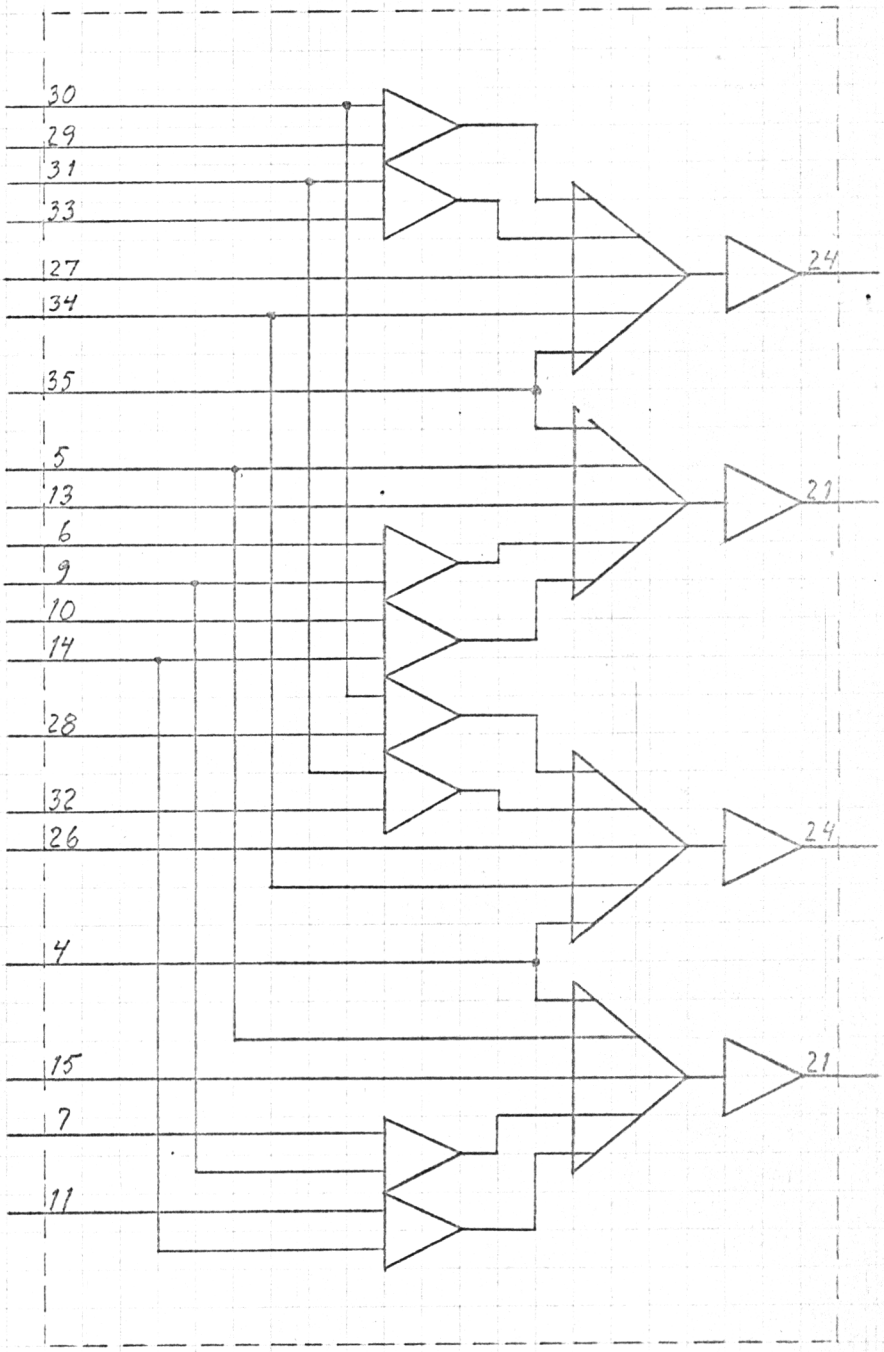
30
29
31
33
27
34
35
5
13
6
9
10
14
28
32
26
4
15
7
11
24
21
24
21

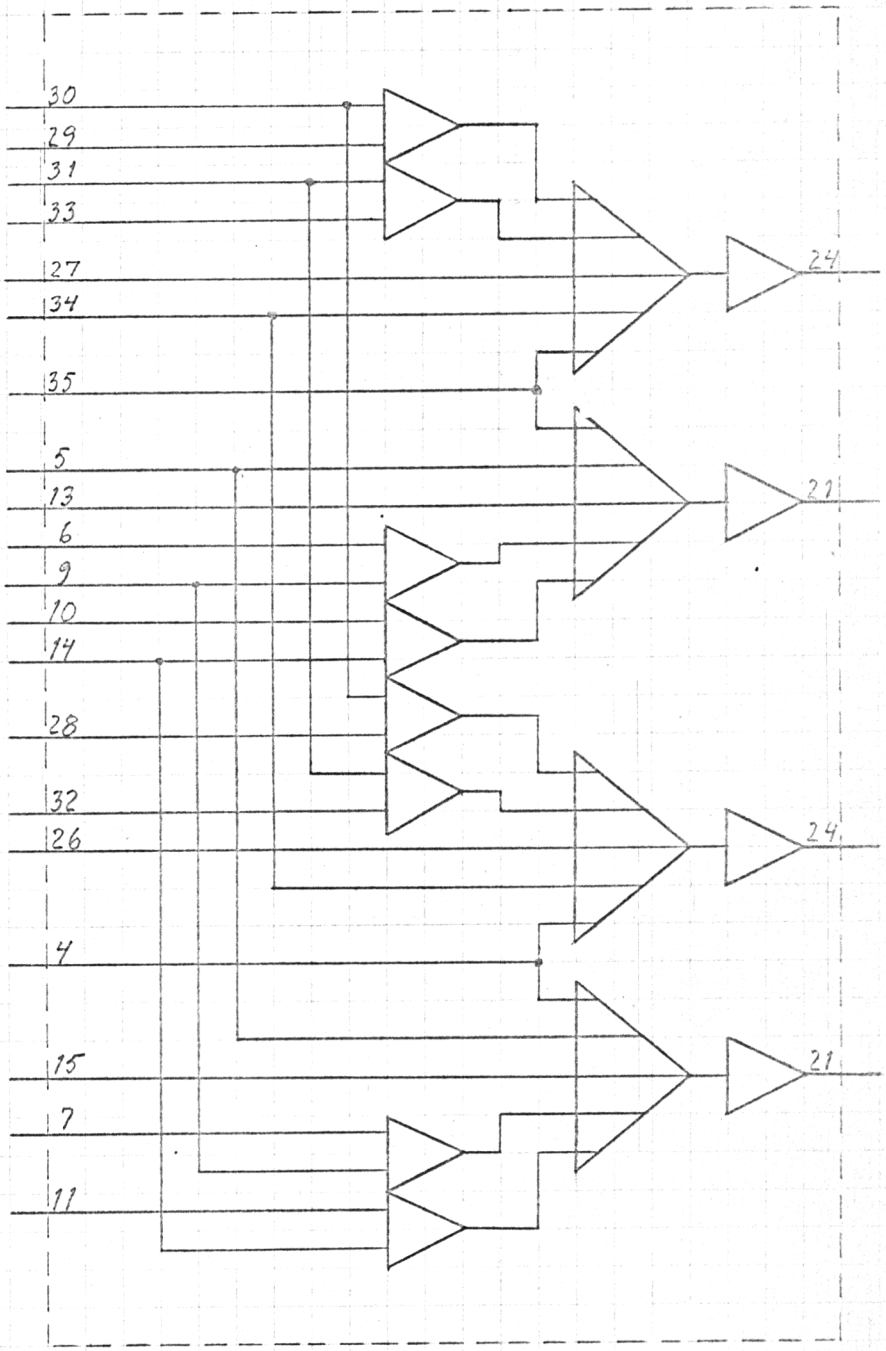
30
29
31
33
27
34
35
5
13
6
9
10
14
28
32
26
4
15
7
11
24
21
24
21

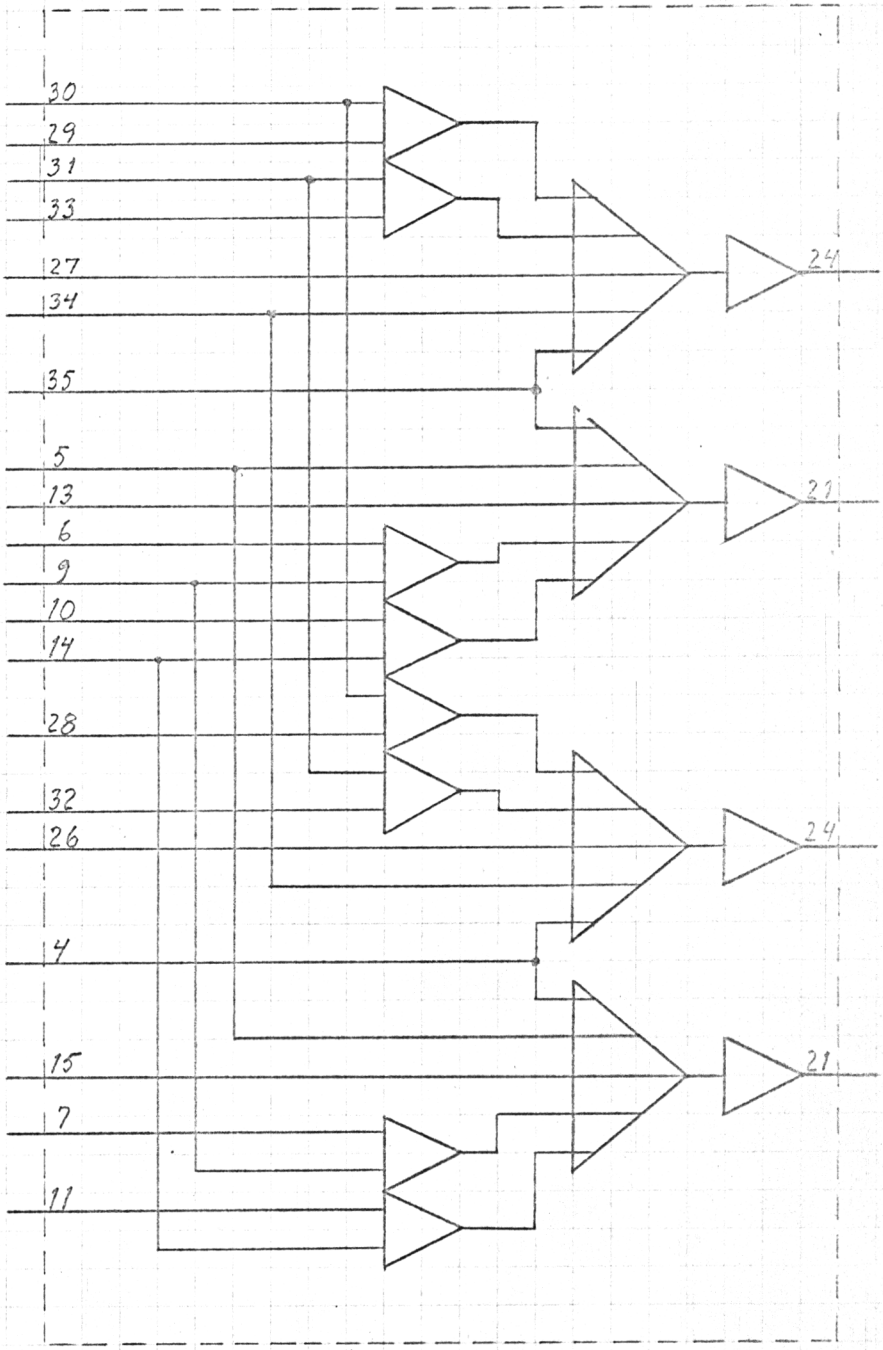
30
29
31
33
27
34
35
5
13
6
9
10
14
28
32
26
4
15
7
11
24
21
24
21

HP Button

KB 12 og 13

B1-26 Schmitt Trigger 244

296 C6-7

$1 \rightarrow HP_h$

12 µS

HP

$\overline{HP_l}$

$Reset_h$

HP_l

VAC_h

BYO_h

5 µS

Mode 5_h

209-2 C6-1

Mode 1

dynamisk

statisk

VAC_h

HP_l

$Reset_h$

Mode 5_h

Mode 5

2 µS

Mode 5_l

$MA\,1_l$

$MA\,1_h$

MA 1

209-5 A2-1

To Start-Stop Circuits

B1-28-24(32) Mode 5_h

b fl. fl.

b_h

$\overline{b}_h$

209-4 C6-5

223-1 C6-4

200-7 C6-3

Mode 5_l

223 C5-9

223 C5-10

C6-22-14 write $b \cdot$ Mode 5_l

C6-22-26 read $\overline{b} \cdot$ Mode 5_l

TL_l C3-25-35

See Block Diagram for Drum Circuits.

290-3 C2-22

$(TD = 0)_h$

$(TD = 0)_l$

Decoding of TD

(Crosswire A2-22-21)

Mode 5_h 15AA

Terminals in KE

Diodes in KE

Hartly Plug to KE

231	45	MA 1
	79	2
	138	3
	163	4
	188	5
	219	6
232	233	7
	282	9
	318	10
	341	11
	358	12
	602	22
	631	23
115	164	4
	230	7
	342	11
128	176	5
	278	9

18DD

18MM

GIER 6

A/S REGNE CENTRALEN

drawn by	J.R.S.	
checked	1-7-65	
checked	~~A.G.~~	
checked	1-7-67	

HP - Button and Mode 5.

pages | page

pos.

Mode 1

Beting. afkodn.

Q

R

Mode 2

Ordre afkodn.

S

Beting. afkodn.

T

U

Mode 3

Beting. afkodn.

Mode 4

Beting. afkodn.

A

B

C

D

E

F

Tårne

Dioder (i dobbelt afgiel)

Kerneenhed

Z

Y

X

Udførelse af mikrofunktioner

„1" - stilling af næste MA

KPA_l

KE

N

KPO_h

KPA_l

KE

O

KPO_h

KPA_l

KE

P

KPO_h

MA - FL.FL.

KPA_l SET

KPO_h RESET

MA x_1

MA x_2

MA x_3

A/S REGNE CENTRALEN	drawn by	K.F.	GIER Styreenhed Princip - diagram	pages / page
	checked	27.-7.-65.		
	checked			pos.
	checked			

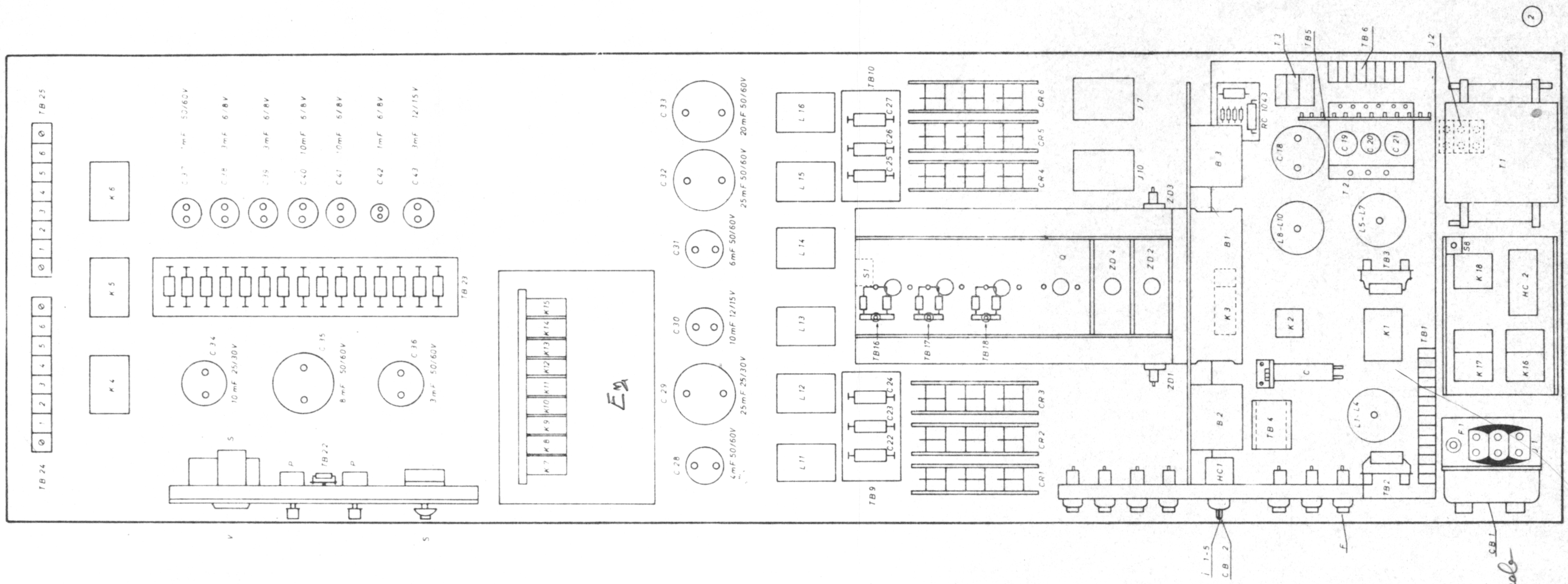

Unit: GIER 6 PS	Designed H.W.	MAINS COMPONENTS	Drawing No
REGNE CENTRALEN	Approved		Drawn by R.N. 6.8.66
	Checked 25.10.65		Checked F.E. 26-2-67
	Last Revision		1 Sheets / Sheet 1
			2

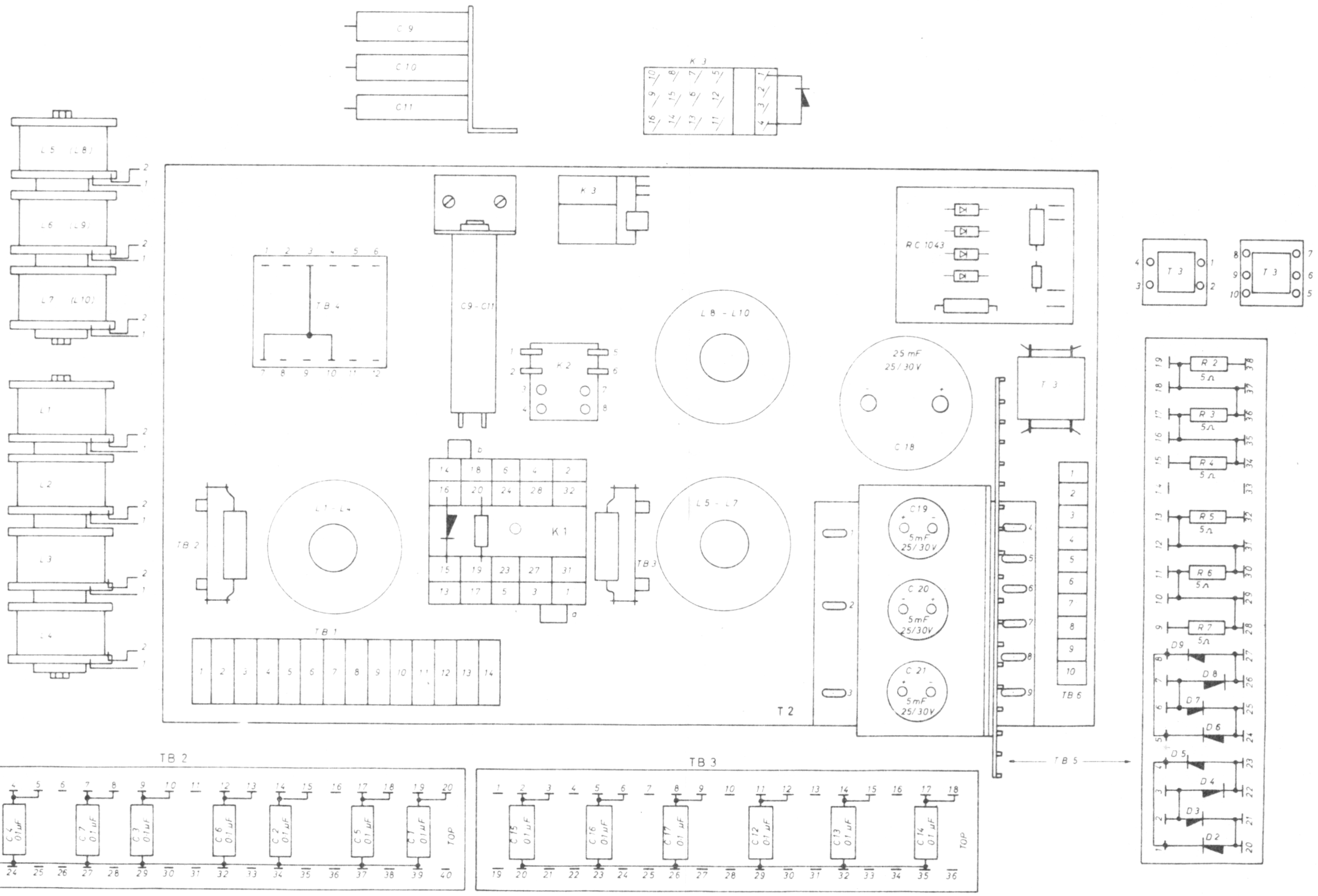

(4)

Unit: GIER 6 PS	Designed H.V.	H. T. Section	Drawing No
REGNE CENTRALEN	Approved		Drawn by R.N. 7.8.66
	Checked 25.10.65		Checked F.E. 26-2-67
	Last Revision		1 Sheets / Sheet 1
			4

Gl 11 LT 16

Mode 2 — OR 20 — OR 21 — OR 22 — OR 23 — OR 24 — OR 25 — b+c — OR 41 — OR 26 — AC 00 — AC 10 — H 00

mode 2

0209-2 c6-1 · 0224 B5-29 · 0224 B5-30 · 0224 B5-31 · 0224 B5-32 · 0224 B5-33 · 0224 B5-34 · 0209-4 C6-5 · B3-27 · 0224-2 B5-50 · 0214-1 B6-36 · 0224 B5-35 · 0200-14

Afkodning af AC (tværtråd) — 0202-9 A5 — Styring af IND 0231 c1-20 — 0233 c1-21 IND-operationer — $\overline{AC^*} = \overline{AC} \cdot \overline{K_0}$ — $AC^* = AC + K_0$ — 0200-5 c2-21 — 0200-16 — A5-16 0202-2 — A3-5 0205-2 — A2-4 — 0214-7 A4-2

Afkodning af TD (tværtråd) — 0212 A2 — 0214-8

A K F18 K16 X — AC$_4$~AC ≠ 0

H13 K13 J2 J5 J6 H3 K4 K8 F2 G9 K7

0222 c4-16 OP2$_h$ · 0222 c4-16 OP3$_h$ · 0222 c4-15 OP4$_h$ · 0222 c4-15 OP5$_h$

0223 c5-20 · 0223 c5-12 · 0223 c5-18 · 0223 c5-17 · 0223 c5-15 · 0223 c5-16 · 0223 c5-19 · 0223 c5-14 · 0223 c5-13

X-felt/H22 ind 1) — X-felt 1) — X-felt ud 1)

Plus$_l$ 214-4 — A4-3 — A4-1 — 0215 — TD ≠ 0$_l$ c2-22 — TD ≠ 0$_h$

OR 24$_l$ 0224 B5-33 — OR 25$_l$ 0224 B5-34 — $\overline{OR\ 25}_l$ c2-22 0214-8 — MDO$_l$ 0202-1 A5-6

H-stik / Tårne / Diode nr

H-stik	Tårne	Diode nr
16 KK	297	43 MA 1 · 115 MA 2 · 137 MA 3 · 157 MA 4 · 179 MA 5 · 222 MA 6
16 LL	298	235 MA 7 · 259 MA 8 · 335 MA 11 · 365 MA 12
16 MM	299	413 MA 14 · 435 MA 15 · 479 MA 17 · 513 MA 18
16 NN	300	535 MA 19 · 579 MA 21 · 613 MA 22 · 635 MA 23 · 655 MA 24
21 A	241	42 MA 1
19 P	157	116 MA 2
20 Y	219	136 MA 3 · 234 MA 7
20 R	208	178 MA 5 · 210 MA 6 · 355 MA 12 · 379 MA 13 · 456 MA 16 · 556 MA 20
19 NN	186	612 MA 22 · 260 MA 8
20 H	196	418 MA 14 · 279 MA 9 · 313 MA 10 · 440 MA 15 · 458 MA 16
20 FF	230	534 MA 19 · 478 MA 17
19 EE	177	512 MA 18
19 X	168	654 MA 24

Plus = OR 24 · $\overline{OR\ 25}$ + OR 23 ($\overline{OR\ 25 \oplus MDO}$)

Siemens-Elem

A/S REGNE CENTRALEN

drawn by	K.F.	pages	
checked	27-7-65	page	
checked	15-12-65		
checked		pos.	

GIER
Mode 2
OP. 2-3-4-5.

1/ GIER I + II + III only III direct connection

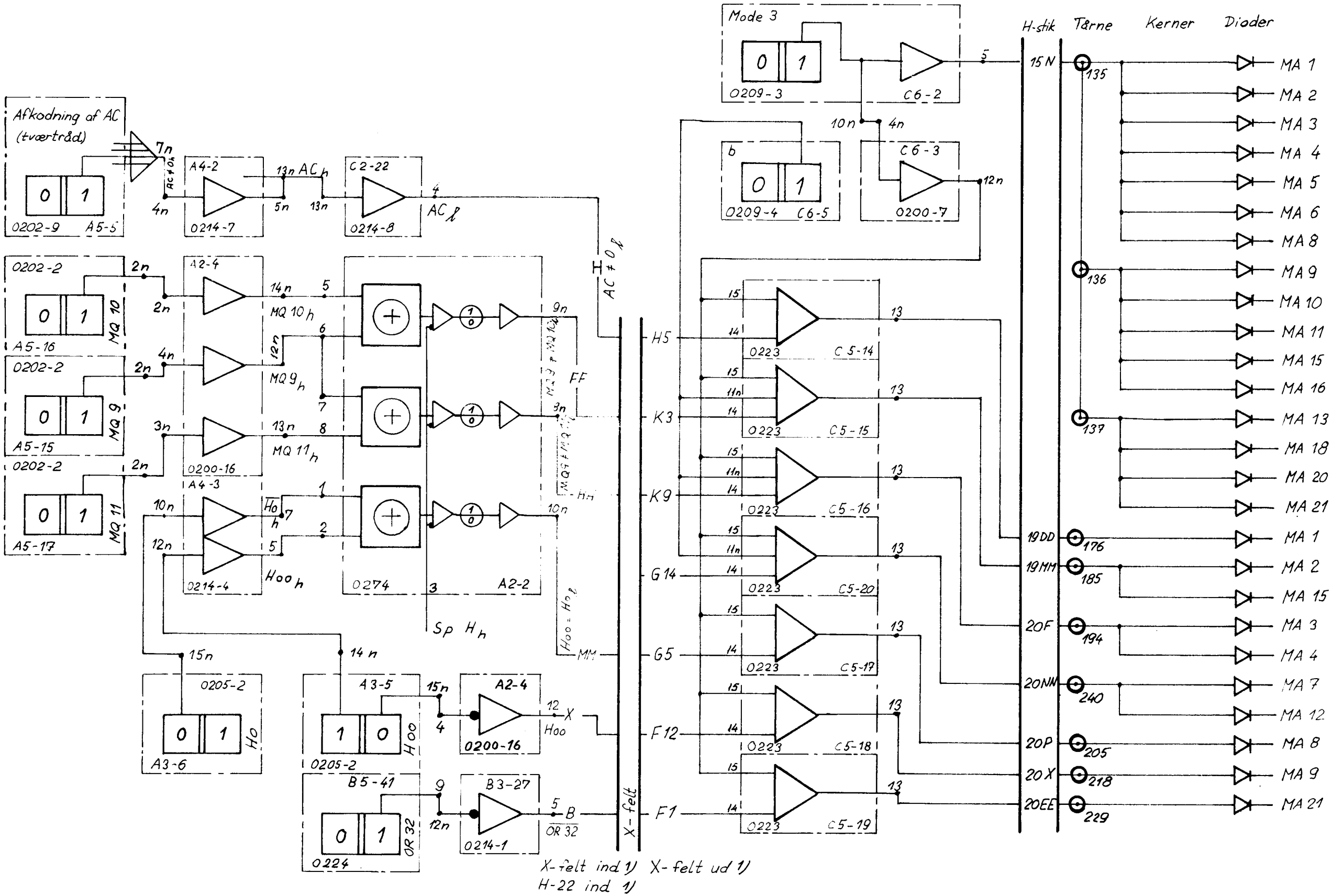

1) GIER I + II + III only, IV direct connection.

A/S REGNE CENTRALEN	drawn by	K.F.	GIER Mode 3	pages / page
	checked	27-7-65.		
	checked	15-12 65		pos
	checked			

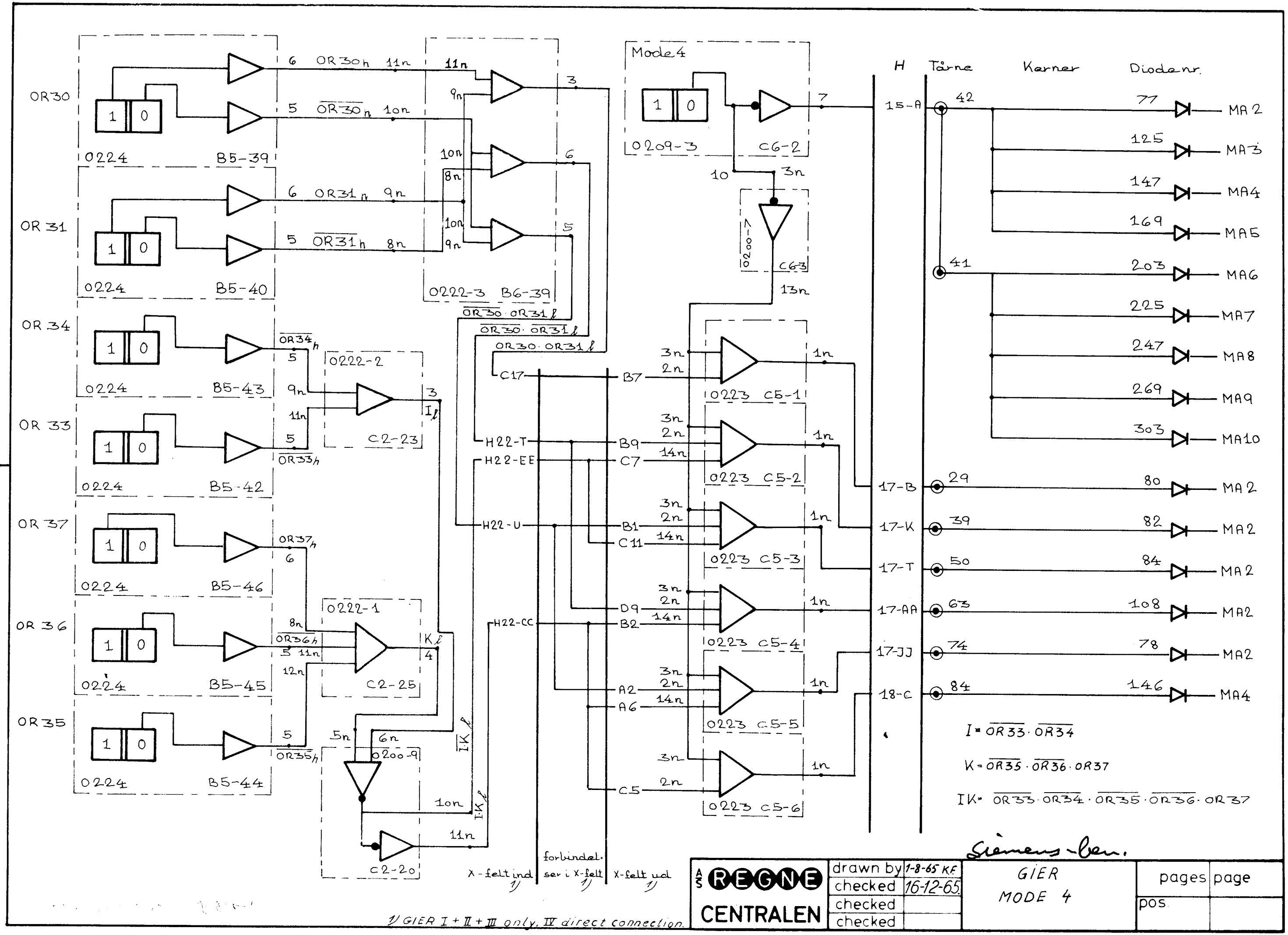

OR30
OR31
OR34
OR33
OR37
OR36
OR35
0224
B5-39
B5-40
B5-43
B5-42
B5-46
B5-45
B5-44
OR30h
OR31h
OR34h
OR33h
OR37h
OR36h
OR35h
0222-3
B6-39
0222-2
C2-23
0222-1
C2-25
0200-9
C2-20
Mode 4
0209-3
C6-2
0200-7
C6-3
0223
C5-1
C5-2
C5-3
C5-4
C5-5
C5-6
C17
H22-T
H22-EE
H22-U
H22-CC
B7
B9
C7
B1
C11
D9
B2
A2
A6
C5
X-felt ind 1)
forbindel. ser i X-felt 1)
X-felt ud 1)
H
Tårne
Kerner
Diodenr.
15-A
17-B
17-K
17-T
17-AA
17-JJ
18-C
MA2
MA3
MA4
MA5
MA6
MA7
MA8
MA9
MA10
I = OR33 · OR34
K = OR35 · OR36 · OR37
IK = OR33 · OR34 · OR35 · OR36 · OR37
1) GIER I + II + III only. IV direct connection.
Siemens-ben.
AS REGNE CENTRALEN
drawn by 1-8-65 KF
checked 16-12-65
checked
checked
GIER MODE 4
pages
page
pos.

VENSTRE SIDE AF GIER

FORT

Core	Gen.Pos.	Type	Function
1	A1-2-32	MA	MA 1
2	A1-2-30	MA	MA 2
3	A1-3-32	MA	MA 3
4	A1-3-30	MA	MA 4
5	A1-4-32	MA	MA 5
6	A1-4-30	MA	MA 6
7	A1-5-32	MA	MA 7
8	A1-5-30	MA	MA 8
9	A1-6-32	MA	MA 9
10	A1-6-30	MA	MA 10
11	A1-7-32	MA	MA 11
12	A1-7-30	MA	MA 12
13	A1-8-32	MA	MA 13
14	A1-8-30	MA	MA 14
15	A1-9-32	MA	MA 15
16	A1-9-30	MA	MA 16
17	A1-10-32	MA	MA 17
18	A1-10-30	MA	MA 18
19	A1-11-32	MA	MA 19
20	A1-11-30	MA	MA 20
21	A1-12-32	MA	MA 21
22	A1-12-30	MA	MA 22
23	A1-13-32	MA	MA 23
24	A1-13-30	MA	MA 24
25			Reserve

Unit: GIER 6	Designed H.I. . .	MICROFUNCTIONS	Drawing No
REGNE CENTRALEN	Approved		Drawn by B.R.17.10.66
	Checked I. 2. 6.2. .		Checked F.E.23-2-67
	Last Revision		8 Sheets / Sheet 1

Core	Gen.Pos.	Type	Function	
26	A3-4-32	Gm	H00-9	
27	A3-4-31	Gm	H10-19	
28	B2-28-30	Gm	H20-29	
29	B2-28-29	Gm	H30-39	
30	B2-26-33	Gm	H40-41	
31	A3-3-29	Gm	oH00	Reset of H00
32	A3-1-31	Gm	Line 0 →H00	Line 0 to H00
33	A3-3-34	Gm	H1-9 right shift	Line 0-8 to H1-9
34	A3-3-33	Gm	H10-19 right shift	Line 9-18 to H10-19
35	B2-27-30	Gm	H20-29 right shift	Line 19-28 to H20-29
36	B2-27-29	Gm	H30-39 right shift	Line 29-38 to H30-39
37	A3-3-30	Gm	Line 00 H00+H0	Line 00 to H00 and H0
38	A3-3-31	Gm	MQ 39→ H0	MQ 39 to H0
39	A3-3-32	Gm	Line 39 → H0	Line 39 to H0
40	A3-4-30	Gm	H0-9 left shift	Line 1-10 to H0-9
41	A3-4-29	Gm	H10-19 left shift	Line 11-20 to H10-19
42	B2-27-34	Gm	H20-29 left shift	Line 21-30 to H20-29
43	B2-27-33	Gm	H30-38 left shift	Line 31-39 to H30-38
44	B2-27-31	Gm	MQ0 → H39	MQ0 to H39
45	B2-26-32	Gm	o → H39	Reset of H39
46	B2-27-32	Gm	Line 0 →H39	Line 0 to H39
47	A3-4-34	Gm	LI0-9	
48	A3-4-33	Gm	LI10-19	
49	B2-28-34	Gm	LI20-29	
50	B2-28-33	Gm	LI30-39	

Unit: GIER 6	Designed H.I.	MICROFUNCTIONS	Drawing No
REGNE CENTRALEN	Approved		Drawn by B.R. 17.10.66
	Checked I. 2. 62.		Checked F.E. 23-2-67
	Last Revision		8 Sheets Sheet 2
			20

Core	Gen.Pos.	Type	Function	
51	B2-28-32	Gm	LI40-41	
52	B2-28-31	Gm	IO	Indicator Operation
53	A3-1-33	Gm	SR	
54	A6-4-34	Gm	AC00-9	
55	A6-4-33	Gm	AC10-19	
56	B5-27-32	Gm	AC20-29	
57	B5-27-31	Gm	AC30-39	
58	A3-1-32	Gm	TA	
59	A3-2-34	Gm	OT	
60	A3-1-29	Gm	Reserve	
61	A5-4-30	Gs	H00-9	
62	A5-4-29	Gs	H10-19	
63	B4-27-32	Gs	H20-29	
64	B4-27-31	Gs	H30-39	
65	A5-1-32	Gs	MQ0-9	
66	A5-1-31	Gs	MQ10-19	
67	B4-28-32	Gs	MQ20-29	
68	B4-28-31	Gs	MQ30-39	
69	A5-2-33	Gs	SR	
70	A5-2-32	Gs	TA	
71	A5-3-34	Gs	OT	
72	C1-5-34	Gs	TK	
73	A5-3-31	Gs	TD Cross	TD to Line 0-9
74	A5-3-32	Gs	AD2 Cross	AD2 to Line 10-19
75	A5-4-34	Gs	Adder 00-19	

Unit: GIER 6	Designed H.I.	MICROFUNCTIONS	Drawing No
REGNE CENTRALEN	Approved		Drawn by B.R.17.10.66
	Checked 1.2.62.		Checked F.E.23-2-67
	Last Revision		8 Sheets Sheet 3

Core	Gen.Pos.	Type	Function	
76	B4-27-30	Gs	Adder 20-39	
77	A5-3-33	Gs	AD2	
78	A5-3-30	Gs	TD	
79	B6-40-26	Speciel	Line 30-39 Line 20-29	Line 30-39 to 20-29
80	A5-3-29	Gs	39-TD	39 to TD
81	A6-2-29	Gm	Reserve	
82	A6-4-32	Gm	MQ0-9	
83	A6-4-31	Gm	MQ10-19	
84	B5-27-30	Gm	MQ20-29	
85	B5-27-29	Gm	MQ30-39	
86	B1-30-4	Speciel	Stop	
87	A6-3-34	Gm	MQ1-9 right shift	MQ0-8 to MQ1-9
88	A6-3-33	Gm	MQ10-19 right shift	MQ9-18 to MQ10-19
89	B5-26-30	Gm	MQ20-29 right shift	MQ19-28 to MQ20-29
90	B5-26-29	Gm	MQ30-39 right shift	MQ29-38 to MQ30-39
91	A6-3-31	Gm	Line 39 - MQ0	Line 39 to MQ0
92	A6-3-30	Gm	MQ39 - MQ0	MQ39 to MQ0
93	A6-4-30	Gm	MQ0-9 left shift	MQ1-10 to MQ0-9
94	A6-4-29	Gm	MQ10-19 left shift	MQ11-20 to MQ10-19
95	B5-26-34	Gm	MQ20-29 left shift	MQ21-30 to MQ20-29
96	B5-26-33	Gm	MQ30-38 left shift	MQ31-39 to MQ30-38
97	B5-26-31	Gm	0 - MQ39	Reset of MQ39
98	B2-26-31	Gm	1 - MQ39	Set of MQ39
99	A6-5-34	Gm	AD0	
100	A3-2-31	Gm	TD	

BINÆR VÆRDI 39 NB!

Unit: GIER 6	Designed H.I.	MICROFUNCTIONS	Drawing No	
REGNE CENTRALEN	Approved		Drawn by B.R.17.10.66	
	Checked 1.2.62.		Checked F.E.23-2-67	
	Last Revision		8 Sheets	Sheet 4
				22

Core	Gen. Pos.	Type	Function	
101	B5-28-34	Gm	OR20-26 + 40-41	20-26 omitted
102	B5-28-33	Gm	OR27-29	medium add mod
103	B5-28-32	Gm	OR30-39	individual
104	A3-2-32	Gm	AD2	
105	A6-5-33	Gm	TI0-9	
106	A6-5-32	Gm	TI10-19	
107	B5-28-31	Gm	TI20-29	
108	B5-28-30	Gm	TI30-41	
109	A6-1-32	Gm	BS3-9	
110	A6-1-31	Gm	Step	Next Clock Period Omitted
111	A5-4-32	Gs	LI0-9	
112	A5-4-31	Gs	LI10-19	
113	B4-27-34	Gs	LI20-29	
114	B4-27-33	Gs	LI30-39	
115	A5-1-30	Gs	AC00-9	
116	A5-1-29	Gs	AC10-19	
117	B4-28-30	Gs	AC20-29	
118	B4-28-29	Gs	AC30-39 + H40-41	
119	C6-1-31	Speciel	Mode 1	Selection of Mode 1
120	C6-1-27	Speciel	Mode 2	Selection of Mode 2
121	C6-2-31	Speciel	Mode 3	Selection of Mode 3
122	C6-2-29	Speciel	Mode 4	Selection of Mode 4
123	C1-4-34	Gs	TI0-9	
124	C1-4-33	Gs	TI10-19	
125	B4-26-32	Gs	TI20-29	

Core	Gen. Pos.	Type	Function	
126	B4-26-31	Gs	TI30-41	
127	C1-3-34	Gs	AD0	
128	B4-26-34	Gs	CR20-29	
129	B4-26-33	Gs	CR30-41	
130	A5-2-34	Gs	AD1	
131	A6-5-31	Gm	MD00-9	
132	A6-5-30	Gm	MD10-19	
133	B5-27-34	Gm	MD20-29	
134	B5-27-33	Gm	MD30-41	
135	A6-3-29	Gm	0 - MQ0	Reset of MQ0
136	A6-2-31	Gm	GMj	Input Ready Signal from Unsynchronized
137	A4-3-33	Special	Advance TD	TD:= TD+1 Unit
138	A3-2-33	Gm	Advance OT	OT:= OT+1
139	B5-26-32	Gm	Line 0 - MQ39	Line 0 to MQ39
140	A3-1-34	Gm	AD1	
141	A6-2-34	Gm	TK	
142			Reserve	
143	A6-1-34	Gm	BL2-9	
144	A6-1-33	Gm	1 - Z_L	Set of Z_L
145	A6-1-30	Gm	BY0-9	
146	A6-1-29	Gm	1 - Z_S	Set of Z_S
147	A3-1-30	Gm	Overflow	Registration of Overflow in H Register (0 - FF)
148	A6-2-33	Gm	IN	
149	A6-2-32	Gm	Set TL o → b + c	Input Ready Signal from Drum and Reset
150	A6-2-30	Gm	TBA Start Drum	b and c

Unit: GIER 6	Designed H.I.	MICROFUNCTIONS	Drawing No	
REGNE CENTRALEN	Approved		Drawn by B.R. 7.10.66	
	Checked 1.2.62		Checked F.E. 22-2-67	
	Last Revision		8 Sheets	Sheet 5
				24

Core	Gen. Pos.	Type	Function	
151	A5-2-31	Gs	Stop B Pulse, Shift B - A, Shift from KPB	
152	A5-2-30	Gs	BT3-9 "finger registrer" jr. skirvemask	
153	A5-1-33	Gs	MD10-19	
154	B4-28-34	Gs	MD20-29	
155	B4-28-33	Gs	MD30-39	
156	C1-4-31	Gs	o0 and o2-9	Reset Line 0 and 2-9
157	C1-4-32	Gs	o1	Reset Line 1
158	C1-4-30	Gs	o10-14 + o19	Reset Line 10-14 and 19
159	C1-4-29	Gs	o15-18	Reset Line 15-18
160	B4-26-29	Gs	Subtraction	Set Adder to Subtraction
161	A1-14-1	Speciel	Read FL0-9	Read in FL Pos. 0-9
162	A1-14-2	Speciel	Read FL10-19	Read in FL Pos.10-19
163	A1-14-3	Speciel	Read FL20-29	Read in FL Pos.20-29
164	A1-15-1	Speciel	Read FL30-39	Read in FL Pos.30-39
165	A1-15-2	Speciel	Read FL40-41	Read in FL Pos.40-41
166	A1-15-3	Speciel	Write FL	Write in FL Pos.0-41
167	C1-5-33	Gs	IN	
168	C1-5-30	Gs	BS2-9	
169	C1-5-31	Gs	BL2-9	
170	B4-26-30	Gs	Addition	Set Adder to Addition
171	C1-3-33	Gs	1 - h	Set of h (higher halved)
172	C1-3-32	Gs	0 - h	Reset of h
173	B3-26-34	Gs	LI40-41	
174	C1-5-29	Gs	BY0-9	
175	C1-3-31	Gs	TR-Adder (over FL add.)	

Unit: GIER 6	Designed H. I.	MICROFUNCTIONS	Drawing No
REGNE CENTRALEN	Approved		Drawn by B.R.17.10.66
	Checked 1.2.62.		Checked F.E.23-2-67
	Last Revision		8 Sheets / Sheet 7

25

Core	Gen. Pos.	Type	Function	
176	A5-1-34	Gs	MD00-9	
177	B4-27-29	Gs	020-41	Reset Line 20-41
178	B3-26-33	Gs	TBA	
179	B3-26-32	Gs	Reserve	
180	B3-26-31	Gs	1 - C_0	
181	B3-26-30	Gs	1 - AOK	
182	C6-5-6	Speciel	1 - b	Set of b
183	C6-5-26	Speciel	1 - c	Set of c
184			Reserve	
185			Reserve	

Unit: GIER 6	Designed H.J.	MICROFUNCTIONS	Drawing No
REGNE CENTRALEN	Approved		Drawn by B.R.17.10.66
	Checked 1.2.62.		Checked F.E.23-8-67
	Last Revision		8 Sheets Sheet 8
			26

nr.		a	b	c	d	e	f	Oper. trans.
1	TD	= 0	≠ 0					a
2	d = OR32	0	1					b
3	AC	= 0	≠ 0					a
4	F = OR41	0	1					a
5	MD10	0	1					a
6	TD	≠ 0	≠ 0	= 0				c
	MQ38	1	0	~				
7	MD39	0	1					a
8	M ~	0	1					a
9	T1	1	0					a
10	h	0	1					a
11	LI4o	0	1	1				a
	h	~	0	1				
12	MQ9 ⊕ MQ10	0	1					a
13	MQ9 ⊕ MQ11	0	1					a
14	AC10	0	1					b
15	H 00	0	1					a
16	OR25	0	1					a
17	d = OR32	0	0	1	0	1		c,e
	M ~	0	1	~	~	~		
18	MD0	0	1					a
19	H0 ⊕ H1	0	1					a
20	r,s=OR28,29		~	1,0	0,1	1,1	0,0	f
	q ~		1	0	0	0	0	

1) M ~ OR33-34 = 01

2) $q = \overline{TD=0} \cdot \overline{OR27} \cdot (\overline{OR20} + OR22 + OR23)$

Unit: GIER 6

REGNE CENTRALEN

Designed H.I.

Approved

Checked 1.2.62

Last Revision

Condition SK Sequence.

Drawing No

Drawn by E.Y. 22.12.66

Checked F.L. 15-2-67

1 Sheets

Sheet 1

07

nr.		a	b	c	d	e	f	Oper. trans.
21	r,s=OR28,29	0,0	0,1	1,0	1,1			a
	i = OR27	1	1	0	0	≈		
22	r,s·OR28,29	0,1	⌜ 0,1	≈	≈	≈		b
	S = OR26	≈	≈	1	0	≈		
	B	1	1	1	1	0		
23	r,s=OR28,29	0,1	⌞ 0,1					b
24	S = OR26	0	1					a
25	x,v=OR30,31	1,0	1,1	0,0	0,1	0,0	0,1	a
	IK 1)	≈	≈	0	0	1	1	
26	IK 1)	0	1					a
27	OR41	0	1	1				a
	AC* 2)	≈	= 0	≠ 0				
31	plus 3)	1	0					a
33	x = OR30	0	1					a
37	H00 ⊕ MD0	0	1					b
38	H0 ⊕ H10	0	1					a
40	MQ10	0	1					b
42	OR21	0	⌜ 0,0					b
	T1	0						
43	OR22	1	≈	≈				a
	OR24	≈	1	≈				
	OR25	≈	≈	1				
44	OR40	0	1					a
46	OR40	1	⌞ 1,1					b
	h	1						

1) I·K ≈ OR33-37 = 00001

2) AC* = AC + MD

3) 31a = + : OR24 · $\overline{\text{OR25}}$ + OR23 · $\overline{\text{OR25} \oplus \text{MD0}}$ ≈ plus 31b = + : OR24 · OR25 + OR23 · OR25 ⊕ MD0

REGNE CENTRALEN

Unit: GIER 6

Designed H.I.

Approved

Checked 1.2.62

Last Revision

Condition SK Seqence

Drawing No

Drawn by G.T. 2.12.66

Checked F.F. 12-2-67

3 Sheets Sheet 2

28

nr.		a	b	c	d	e	f	Oper. trans.
47	OR23	0	1					a
48	MQ39	0	1					b
49	HOO ⊕ HO	0	1					b
50	LI40	0	1					a
51	jLY	0	1					b
52	BY8-9	0,1	0,0	1,0				a
53	OR21	0	1					b
54	AC*	= 0	≠ 0					-
55	jSY	0	1					b
56	MQ9	0						-
57	MQ9	1						-
58	$C'_0 = 1$	1	0					b
59	$\overline{opt.}$	1	0					b
60	YE = 0	1	0					b
61	$AD1_{pos1} = 1$	1						

Unit: GIER 6

REGNE CENTRALEN

Designed M.I.

Approved

Checked 1.2.62

Last Revision

Condition SK Sequence.

Drawing No

Drawn by G.T. 22.12.66

Checked F.E. 15-2-67

3 Sheets

Sheet 3

29

MA3 TL er en ff ≡ "tromle ledig"

MA4 kører i ring mellem 3 og 4 indtil en evt trommetransport er afsluttet ⇒ TL siges "ledig"

MA5₁ ⇒ TD=37 er TD = 0?
en venteordre kan rundt i sig selv

MA5₂ ≡ TBA trommebeg. udf = 0 det bliver en skriv ordre da vi har sat b = 1

mode 5 × b ⇒ skrivning (SK)
mode 5 × $\overline{b}$ ⇒ læsning (LK)

MA6 bearvardi 39 i TD

MA7 er TL = 0? ellers ringkørsel

MA9₁ tal ned i TD til TD = 0

MA9₂ løser på T da b = 0 [MA6]

MA10
MA11₁ } vente loop.

MA11₂ reetablerer TK

MA12 OT vil stå i delle 0 (iFG)

MA23 OT := 1

virkning ved trykk på

HP 1) (forste) 0.39 eller på K 38

2) kanal 0 38 → 0.39

3) kanal 0 udføres

Operation no CG

Operation Mode 1

MA	Gs	Gm	C.STORE	Decoding	No	Jump
1	OT	AD1				
	o10-41	H10-39				
	Add.					2
2	AD1	AD2				
	o20-41	MD20-39	Read 0-41			3
3	AD2 Cross	MD10-19	Write			4
4	SR	AD2				
	o20-41	OR30-39				5
5	LI0-9	H00-9				
	LI10-19	TD				
	LI20-41	OR20-41				
	oh					
		Count in OT		LI40 ⇒	11a	8
5	LI0-9	H00-9				
	H10-19	TD				
	LI20-29	OR20-29				
	LI40-41	OR40-41				
	1h			LI40h ⇒	11b	8
5	LI10-19	TD				
	LI30-39					
	Line 30-39,20-29	OR20-29				
	LI40-41	OR40-41				
	oh	Count in OT		LI40h ⇒	11c	6
6	TD Cross	H00-9				7
7	H10-19	TD				8
8	o10-19	H10-19				
	TD Cross	MD00-9		q (⇒TIELLEANME)	20b	9
8	o10-19	H10-19				
	AD1	MD00-9		$\bar{q}r\bar{s}$	20c	13
8	o10-19	H10-19				
	AD2	MD00-9		$\bar{q}rs$	20d	13
8	o10-19	H10-19				
	AD0	MD00-9		$\bar{q}rs$	20e	13
8	o10-19	H10-19				
	o0-9	MD00-9		$\bar{q}\bar{r}\bar{s}$	20f	13
9	Dummy		Read 10-41	B		10
9	Dummy			$\bar{B}$	123	1

Unit GIER 6

REGNECENTRALEN

Designed H I

Approved

Checked I 2 6 2

Last Revision

MICROPROGRAMS

Drawing No.

Drawn by B R I 11 66

Checked F E 20-2-67

3 Sheets | Sheet 1

30

Operation no. cl

Operation. Mode 1

MA	Gs	Gm	CS	Decoding	No	Jump
10	Add. 00-19	LI0-9	Write			11
11	Add. 00-19	H00-9				12
12	AD1	MD00-9		$r\bar{s}$	21c	13
12	AD2	MD00-9		$\bar{r}s$	21b	13
12	AD0	MD00-9		rs ⇒ 0	21d	13
12	o0-9	MD00-9		$\bar{r}\bar{s}$	21a	13
13	Dummy			$\bar{B}$	22e	1
13	AD2	AD1		$Bi\bar{r}s$ [i⇒( )]	22a	15
13	Dummy			$Bi(r+\bar{s})$	22b	20
13	o0-41	AC00-39		$Bi\bar{S}$	22c	14
13	Dummy			$Bi\bar{S}$	22d	14
14	Add. 00-19	AD1				
		H20-39				
	Mode 2	Set I1,ob+c				
		Step		$\bar{d}$	2a	1
14	Add. 00-19	MD00-9				
		H20-39				
		Set I1,ob+c				
	Mode 2	Step		d (⇒D)	2b	1
15	Add. 00-19	H00-9	Read 0-41			16
16	TD	H10-19				18
		Step				
18	LI 10-19	TD				19
19	TD Cross	AD2				20
20	H00-9	AD1				
	H10-19	TD		$\bar{r}s$	23a	21
20	Add. 00-19	AD1		$r+\bar{s}$	23b	21
21		Step	Read 0-41			23
23	o0-9	MD00-9				
	o10-19	H10-19				24

Unit: GIER 6

REGNE CENTRALEN

Designed H. L.

Approved

Checked 1 2 62

Last Revision

MICROPROGRAMS

Drawing No

Drawn by B R 1 11 66

Checked F E 21-2-67

3 Sheets | Sheet 2

Operation no. 61

Operation. Mode 1

MA	Gs	Gm	CS	Decoding	No	Jump
24	LI0-9	H00-9				
	LI20-29	0R27-29				8

Unit GIER 6

REGNE CENTRALEN

Designed H I

Approved

Checked 1 2 62

Last Revision

MICROPROGRAMS

Drawing No

Drawn by B R 1 11 66

Checked F E 15-2-67

3 Sheets Sheet 3

Operation no

Operation. Mode 5 Auxiliary Program

MA	Gs	Gm	C.S.	Decoding	No	Jump
1	OT	MD00-9				
	39-TD	Step				2
2	TK	AD2				
	Count in TD(÷1)	⇒TD=38.				3
3	o0-9	AD1				
		Set TL, ob+c				
		Step				4
4	Dummy			$\overline{TL}$	9b	3
4	TD Cross	TK				
		1-b		TL	9a	5
5	Count in TD			TD≠0	1b	5
5	o0-9	TBA Start Drum				
		Step		TD=0	1a	6
6	o0-9	OT				
	39-TD	Set TL, ob+c				
		Step				7
7	Dummy			$\overline{TL}$	9b	6
7	o0-9	TK		TL	9a	9
9	Count in TD			TD≠0	1b	9
9	o0-9	TBA Start Drum		TD=0	1a	10
10		Set TL, ob+c				
		Step				11
11	Dummy			$\overline{TL}$	9b	10
11	AD2	TK		TL	9a	12
12	MD0-9	LI0-9				
	o@10-41	LI10-39	Read 40-41			
		Count in OT				
		Step				22
22		Step				23
23	Mode 1	Step				1

Unit GIER 6

REGNE CENTRALEN

Designed H I

Approved

Checked 1 2 6 2

Last Revision

MICROPROGRAMS

Drawing No

Drawn by B R 1'11 66

Checked F E 15-2-67

1 Sheets | Sheet 1

↑ ≡ LOGISK MULTIPLIKATION PÅ LINIEN.

Operation no 35-51

Operation. PI-VY

MA	Gs	Gm	C.S.	Decoding	No	Jump
1	IN	↑H00-9				
	TD Cross					
		H10-19		$\overline{\text{OR21}}$ (⇒ PI)	53a	2
1	BY0-9	↑H00-9				
	TD Cross					
		H10-19		OR21 (⇒VY)	53b	2
2	TD	MD10-19				
	ø20-41	MD20-39				
	Sub.	Step				4
4	Add. 00-19	TD				5
5	AD1	↑MD00-9				
	TD Cross					
	ø10-19	MD10-19				
	Add.	Step				7
7	Add. 00-19	IN				
	Mode 4			$\overline{\text{OR21}}$	53a	2
7	Add. 00-19	BY0-9				
	Mode 4			OR21	53b	2

Unit GIER 6	Designed H.I.	MICROPROGRAMS	Drawing No
REGNECENTRALEN	Approved		Drawn by B R 1 11 66
	Checked 1 2 62		Checked F E 15-2-67
	Last Revision		1 Sheets / Sheet 1
			34

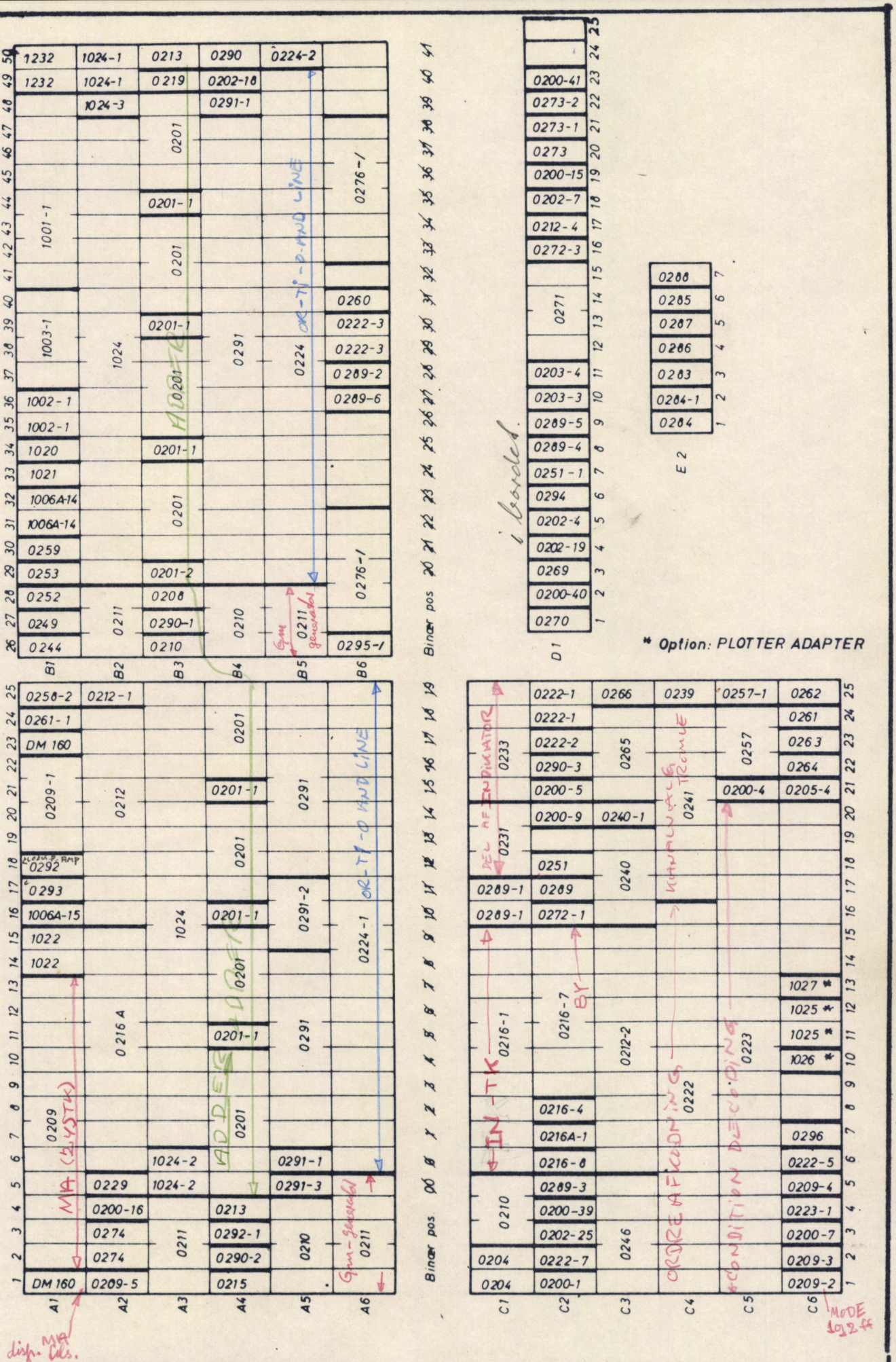

Unit: GIER 6-1	Designed H.I.	GIER 6/ Standard	Drawing No
	Approved		Drawn by B.R. 8.9.66
REGNE CENTRALEN	Checked 1.2.62	Survey of Printed Cards.	Checked F.E. 26.2.67
	Last Revision L.N.L. 7.3.68		1 Sheets / Sheet 1
			MODEL: 6-1

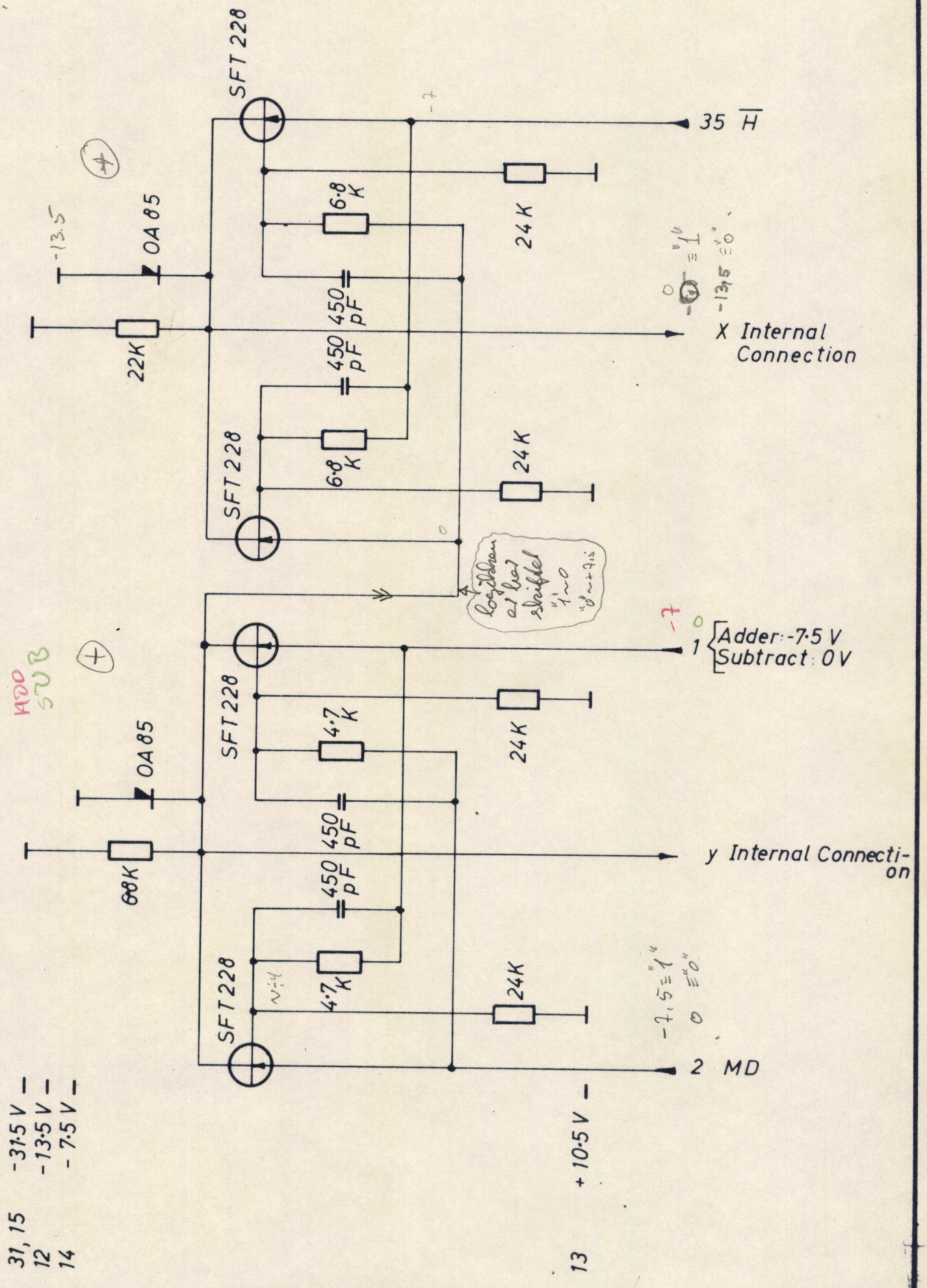

Unit: GIER 6	Designed H.I.	ADDER	Drawing No
REGNE CENTRALEN	Approved		Drawn by B.R. 13. 1. 66.
	Checked 1.2.62.		Checked F.E. 22-2-67
	Last Revision		3 Sheets / Sheet 1
			A4 - B3 / 02016 - 1 - 2

36

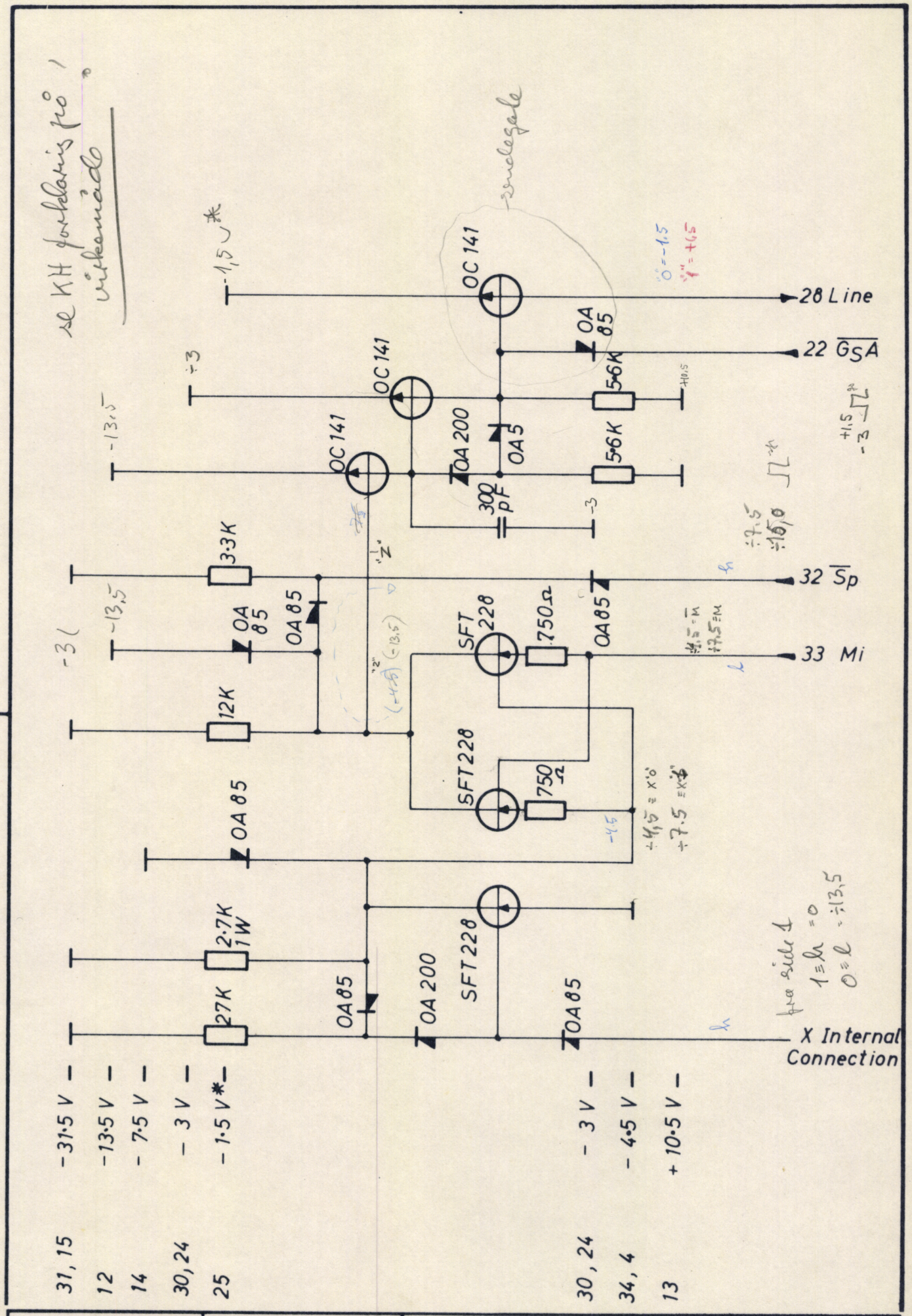

Unit: GIER 6	Designed H.I.	ADDER	Drawing No
REGNE CENTRALEN	Approved		Drawn by B.R. 13. 1. 66.
	Checked 1. 2. 62.		Checked F.E. 22-2-67
	Last Revision		3 Sheets / Sheet 2
			Pos. A4-B3 / 02018-1-2
			37

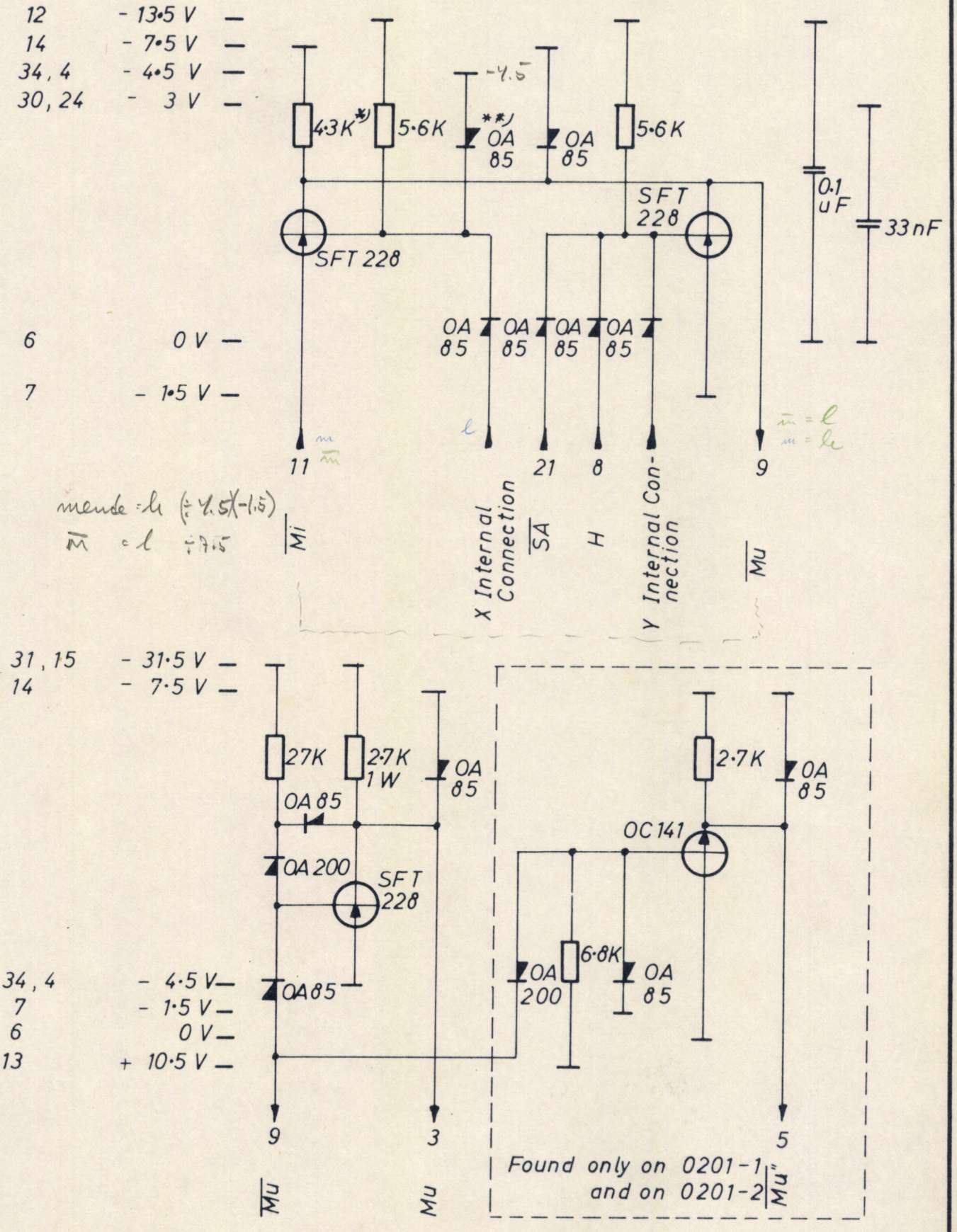

**) Found only on 0201-2

*) Value 5·1K and Connected to -31·5 V on Cards 0201-1 and 0201-2

Unit: GIER 6	Designed H.I.	ADDER	Drawing No
REGNE CENTRALEN	Approved		Drawn by B.R. 13.1.66.
	Checked 1.2.62.		Checked F.E. 23-2-67
	Last Revision	se side 37 g 45 . 36	3 Sheets / Sheet 3
			Pos. A4-B3 / 0201 & -1 -2

en klockpuls

NB!

⑥ TESTPUNKTER TVELLES FRA NEDEN OG OP

5
4
3
2
1

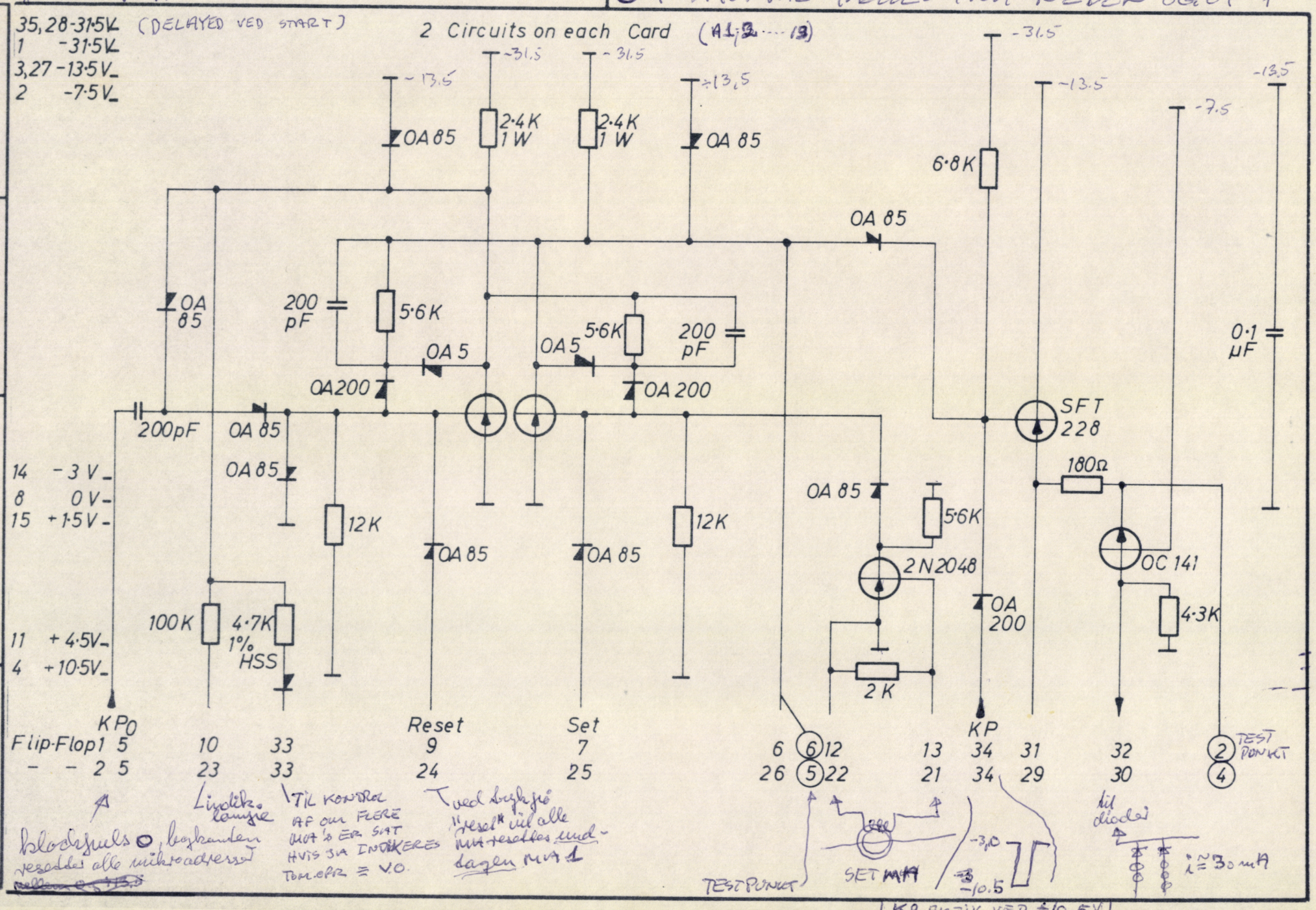

Unit: GIER 6

REGNE CENTRALEN

Designed H.I.

Approved

Checked 1.2.62

Last Revision

MA FLIP-FLOP

Drawing No

Drawn by B.R. 24.1.66.

Checked F.E. 22-2-67

1 Sheets

Sheet 1

Pos. A1

0209

39

VEND

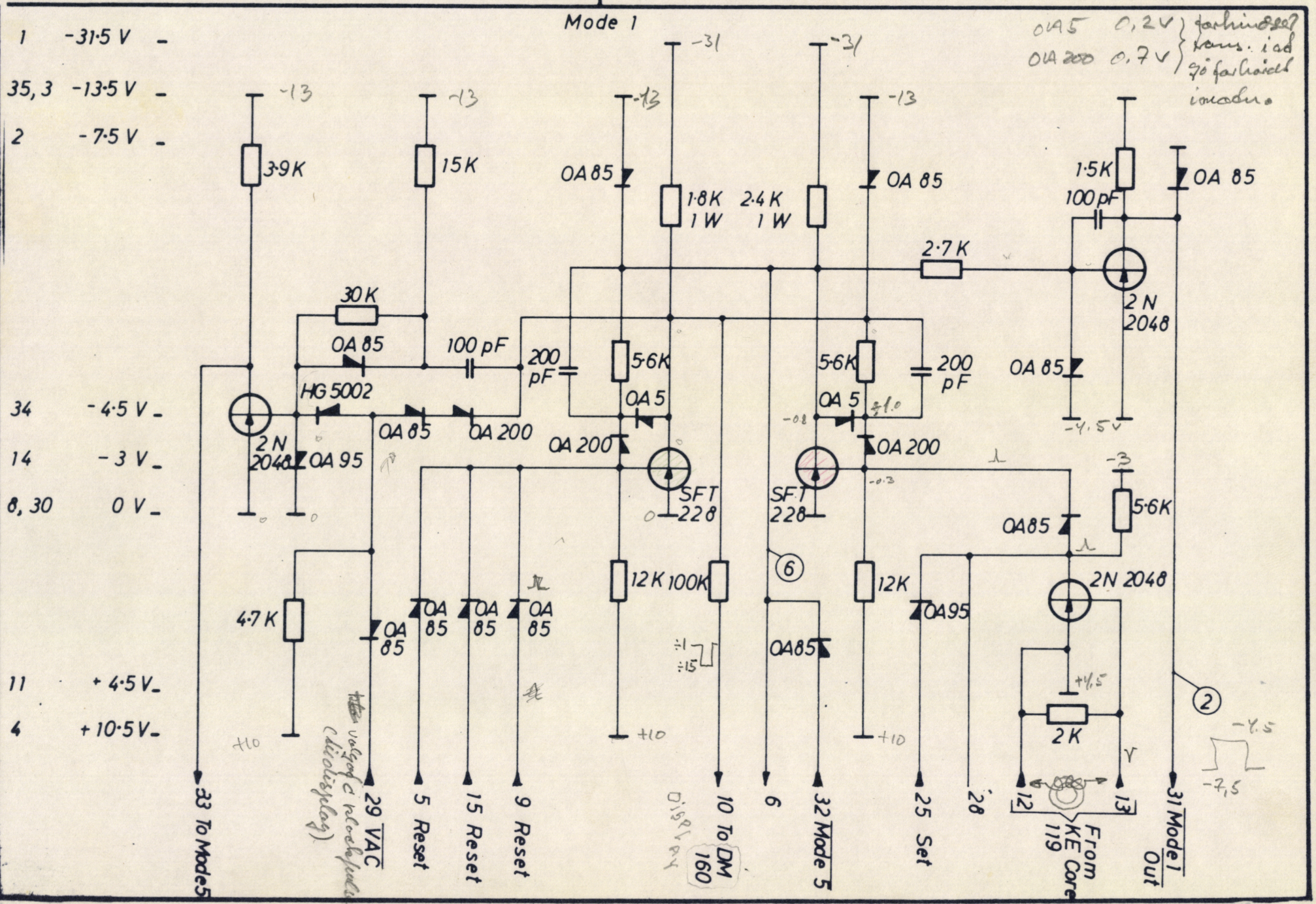

Unit:	GIER 6
Designed	H.I.
Approved	
Checked	1. 2. 62.
Last Revision	

CENTRALEN

MODE 1 & 2 FL. FL.

Drawing No	
Drawn by	B.R. 2. 3. 66.
Checked	F.E. 22-2-67
Sheets	2
Sheet	1
Pos.	C6-1
	0209-2

40

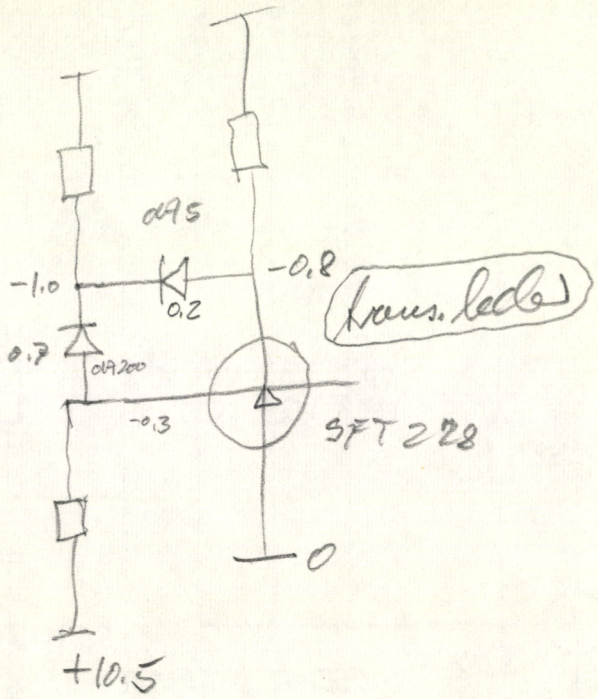

0.95
-1.0
0.2
-0.8
trans. leder
0.7
0.9200
-0.3
SFT 228
0
+10.5

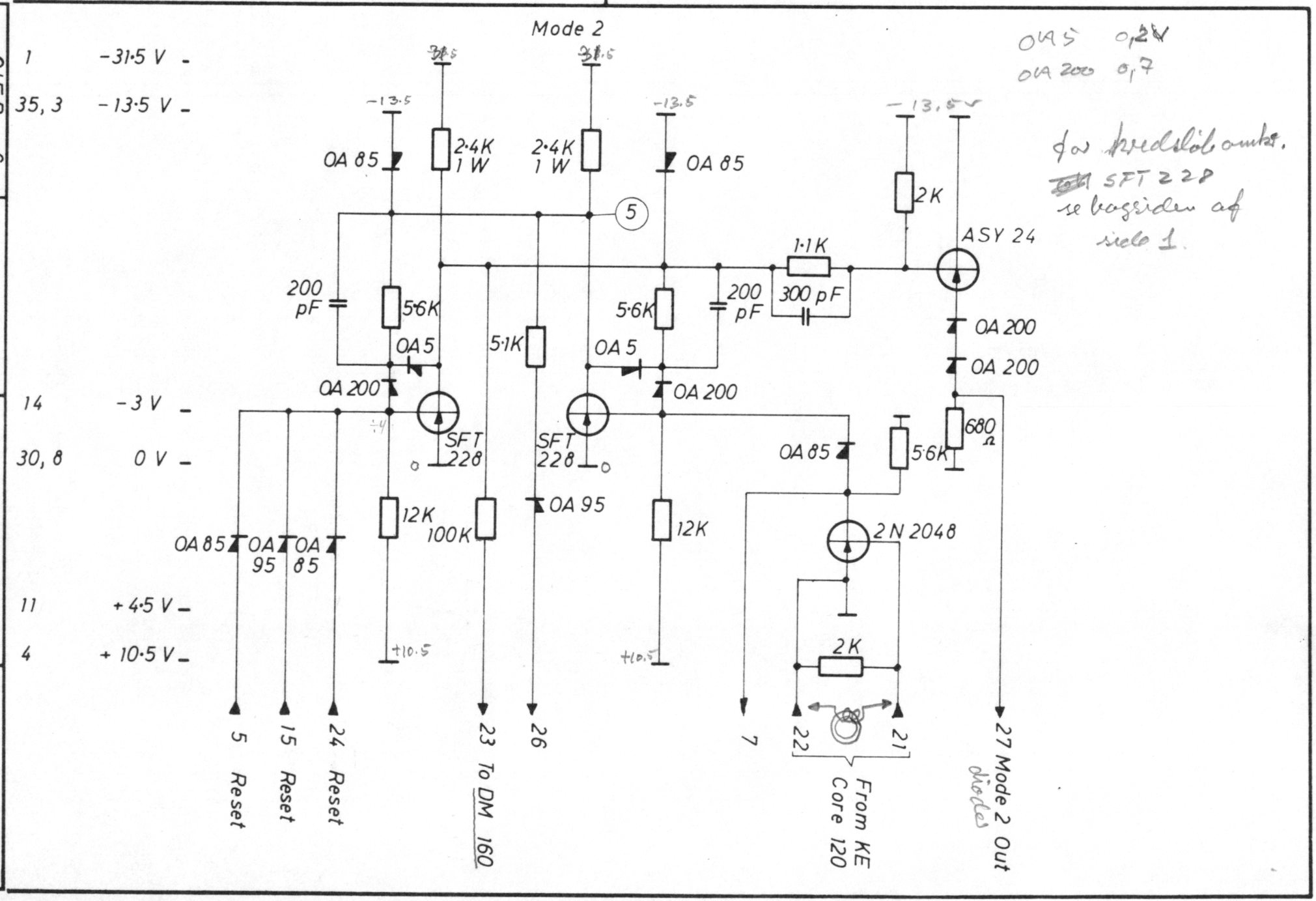

Unit: GIER 6

REGNE CENTRALEN

Designed H.I.

Approved

Checked 1.2.62.

Last Revision

MODE 1 & 2 FL.FL.

Drawing No

Drawn by B.R. 2.3.66.

Checked F.E. 23-2-67

2 Sheets

Sheet 2

Pos. C6·1

0209 - 2

4-1

6 circuits per card.

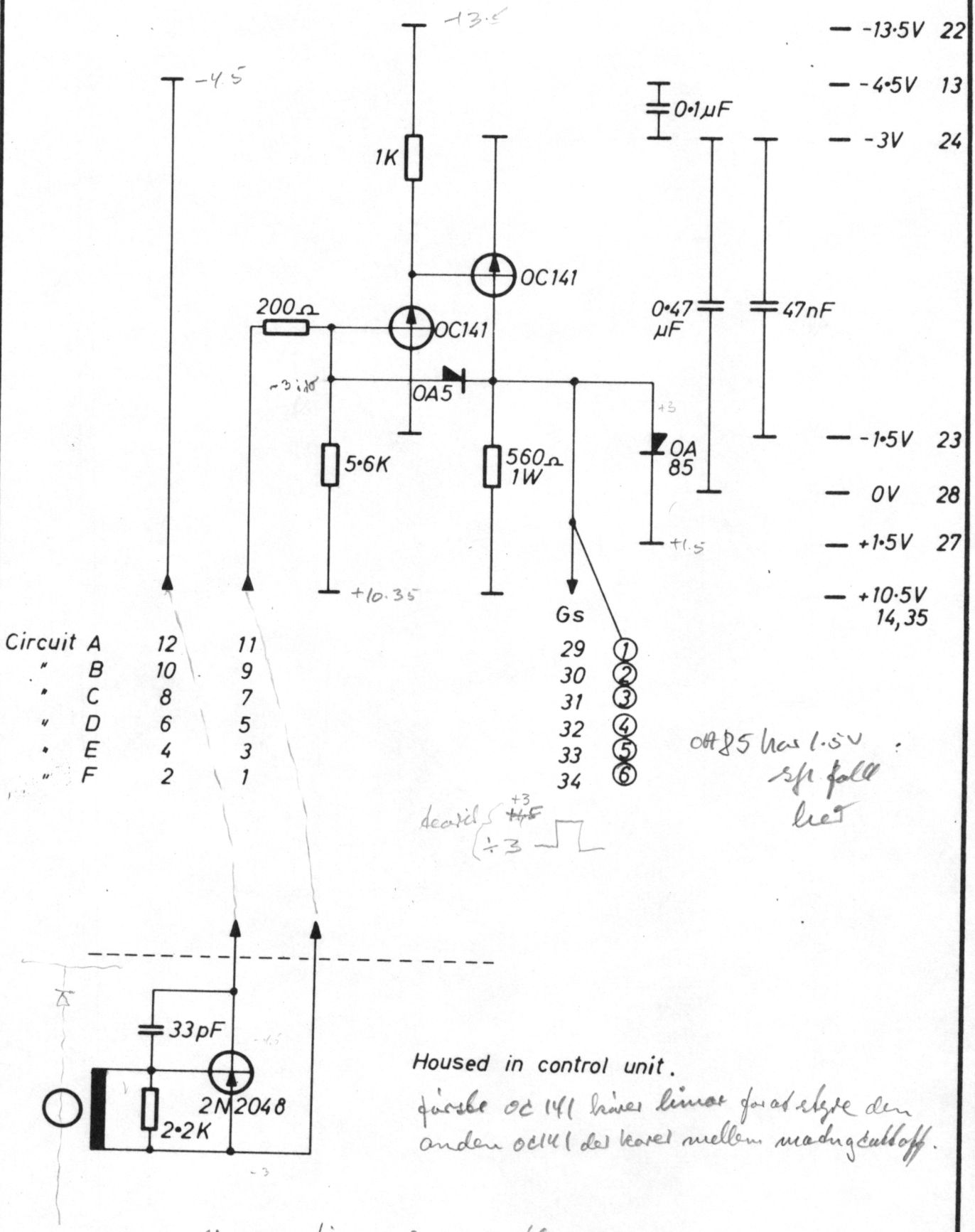

OA85 har 1.5V sp. fall her

Housed in control unit.

første OC 141 kører limar for at styre den anden OC141 der kører mellem mating cutoff.

gs og gm tigger på samme flange (neg.)

Unit: GIER 6	Designed H. I.	Gs - GENERATOR	Drawing No
REGNE CENTRALEN	Approved		Drawn by G. T. 9. 9. 66
	Checked 1. 2. 62.		Checked F.E. 22-2-67
	Last Revision		1 Sheets / Sheet 1
			210

42

6 Circuits on each Card

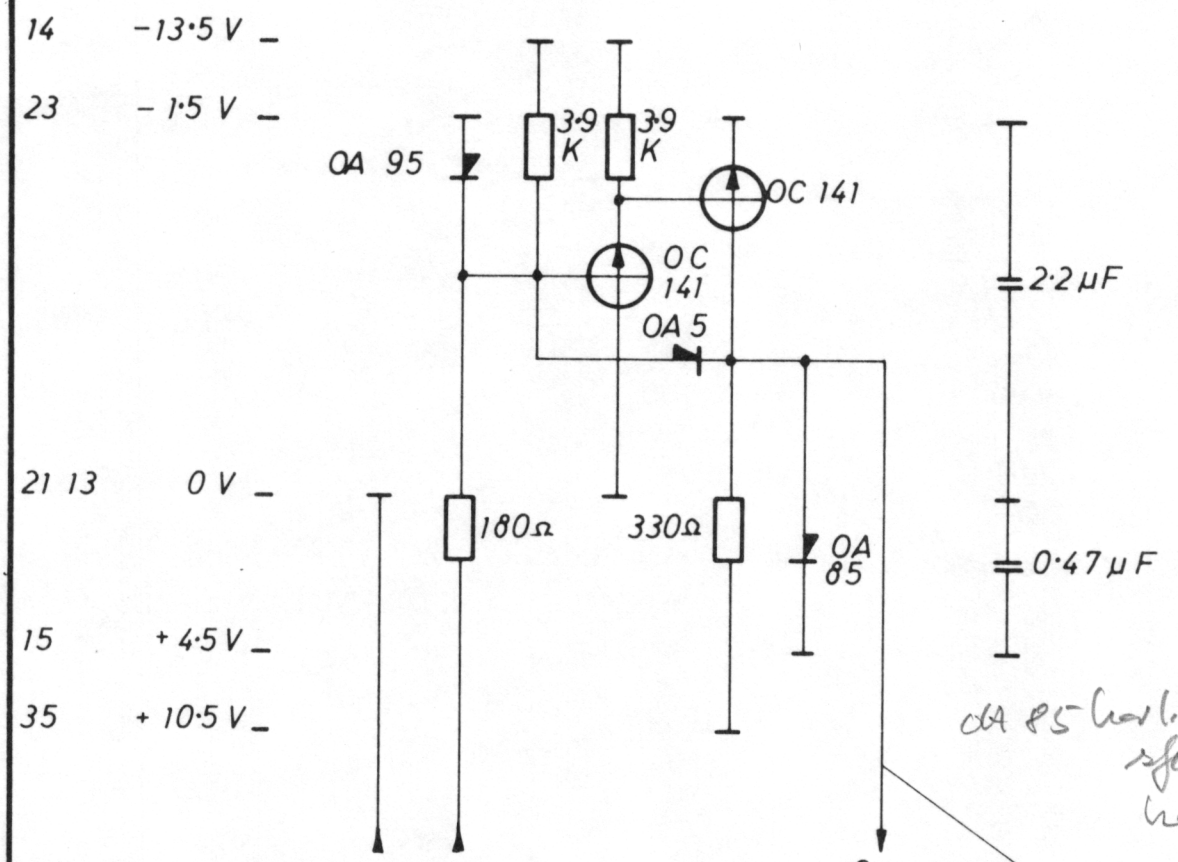

OA 85 har 1.5 V sfe fold het

			Gm	
Circuit A :	12	11	29	1
− B :	10	9	30	2
− C :	8	7	31	3
− D :	6	5	32	4
− E :	4	3	33	5
− F :	2	1	34	6

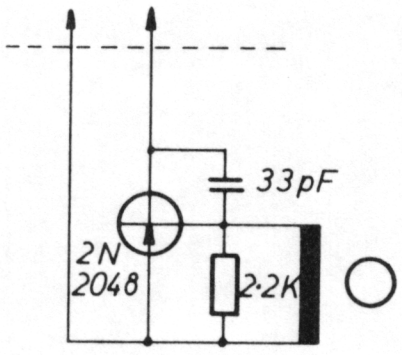

Housed in Control Unit

gs og gm trygge på same flange (neg.)

Unit: GIER 6	Designed H. I.	Gm - GENERATOR	Drawing No
REGNE CENTRALEN	Approved		Drawn by B.R. 8. 3. 66.
	Checked 1. 2. 62.		Checked F. E. 22-2-67
	Last Revision		1 Sheets / Sheet 1
			0211

43

Unit:	Designed H. I.	AD_2 - TD - OT REGISTERS	Drawing No
A/S REGNE CENTRALEN	Approved		Drawn by B.R. 9.3.66
	Checked 1. 2.62.		Checked F.E. 22-2-67
	Last Revision		3 Sheets / Sheet 2
			A 2 / 0212 & - 1

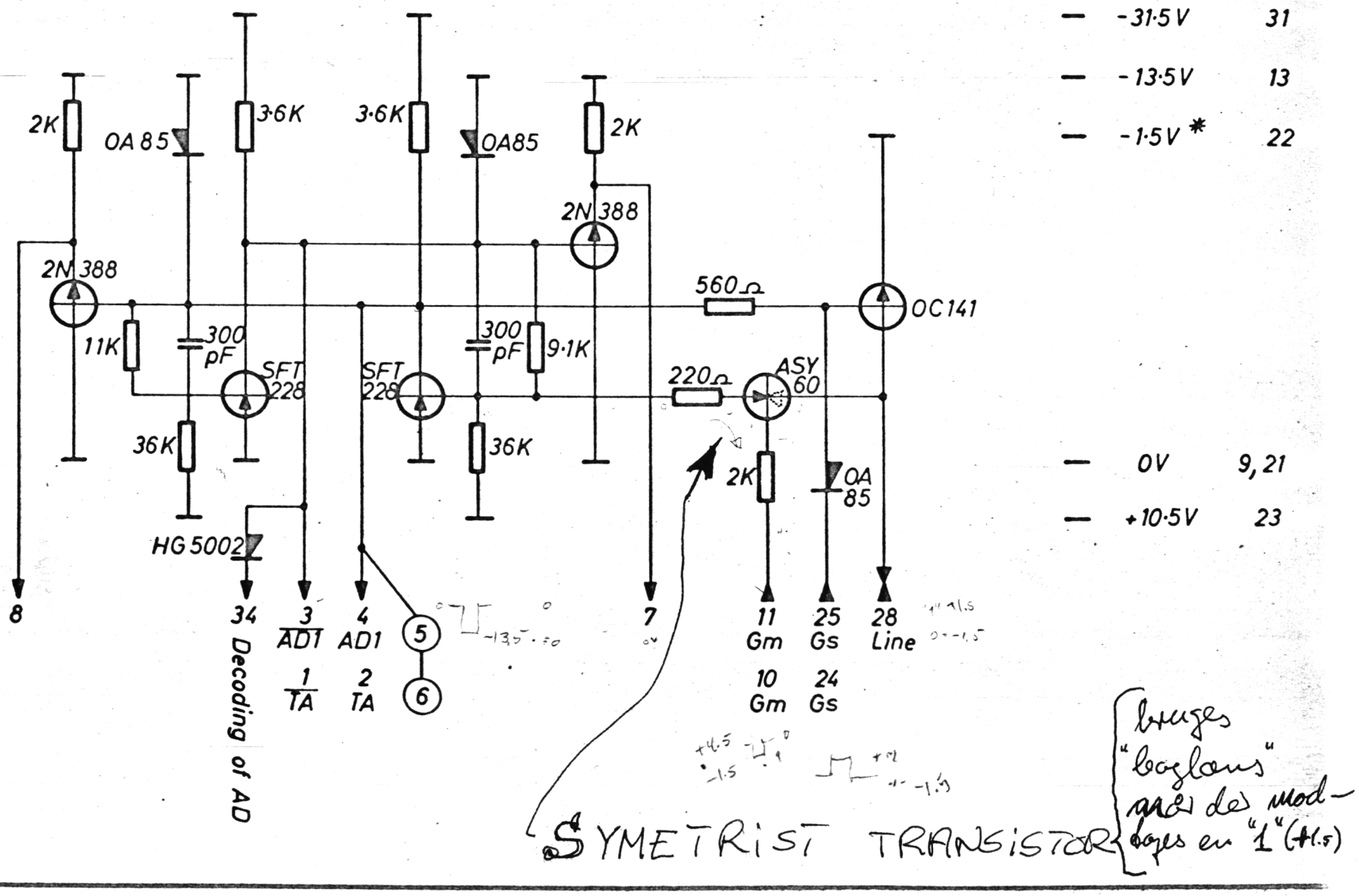

ASY 60 Symetrisk transistor.

Unit:

REGNE CENTRALEN

Designed H. I.

Approved

Checked 12.62

Last Revision

SR. AD1. TA. REGISTERS

Drawing No

Drawn by G.T. 12. 9. 66.

Checked F.E. 22-8-67

2 Sheets

Sheet 2

Pos. A2

216A

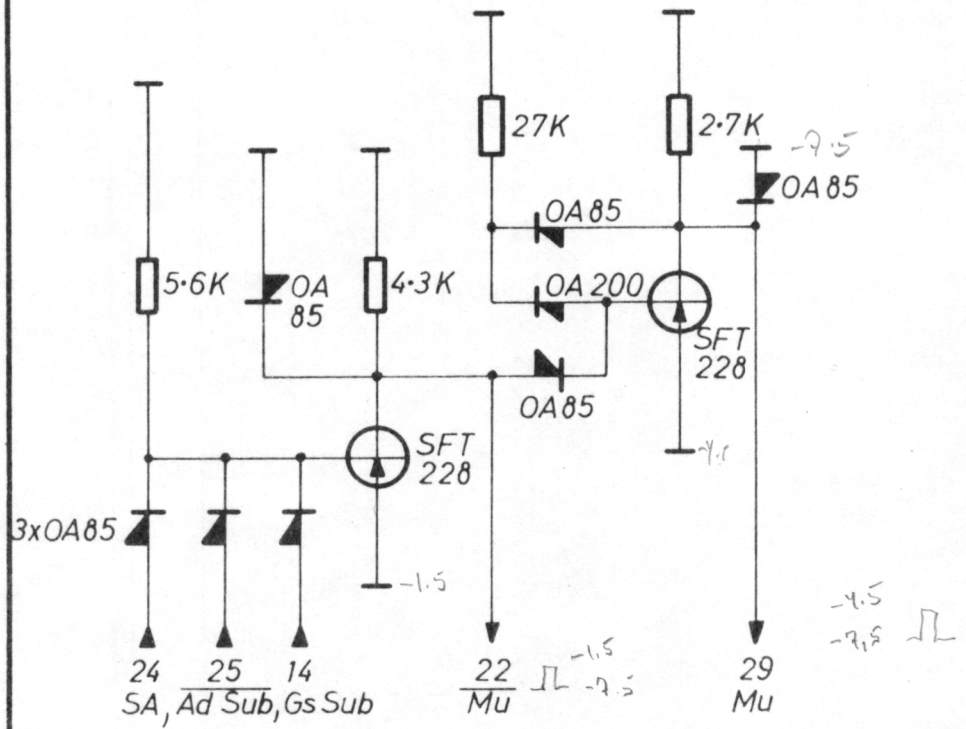

— -31·5V 1,35

— -13·5V 7

— -7·5V 6

— -4·5V 27

— -1·5V 21

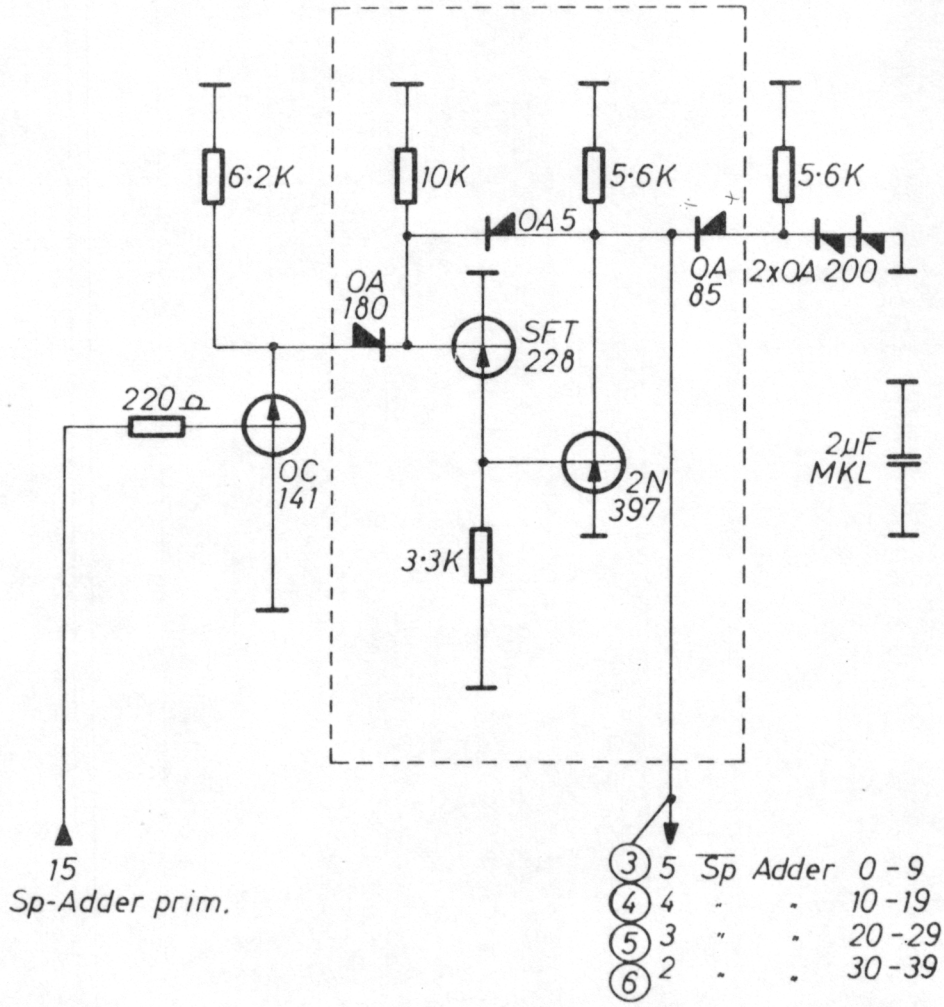

— -31·5V 1,35

— -13·5V 7

— 0V 34

— -7·5V 6

— -3V 9

— +10·5V 8

Unit: GIER 6	Designed H. I.	SP - ADDER CARRIE 39	Drawing No
			Drawn by G.T. 20. 5. 66.
A/S REGNE CENTRALEN	Approved		Checked F. E. 23-2-67
	Checked 1. 2. 62.		1 Sheets / Sheet 1
	Last Revision	se side 37-38-36	Pos. B3-49 / 0219

The enclosed area not mounted in the following positions:

C4-1-A
C4-2-A
C4-4-B and C
C4-5-B,C and D
C4-6-A,B and D
C4-7-B
C4-8-C
C4-11-A
C4-12-D
C4-13-C
C4-14-3
C4-15-A,B and D
C4-16-D

4 Circuits per card.

16 CARDS

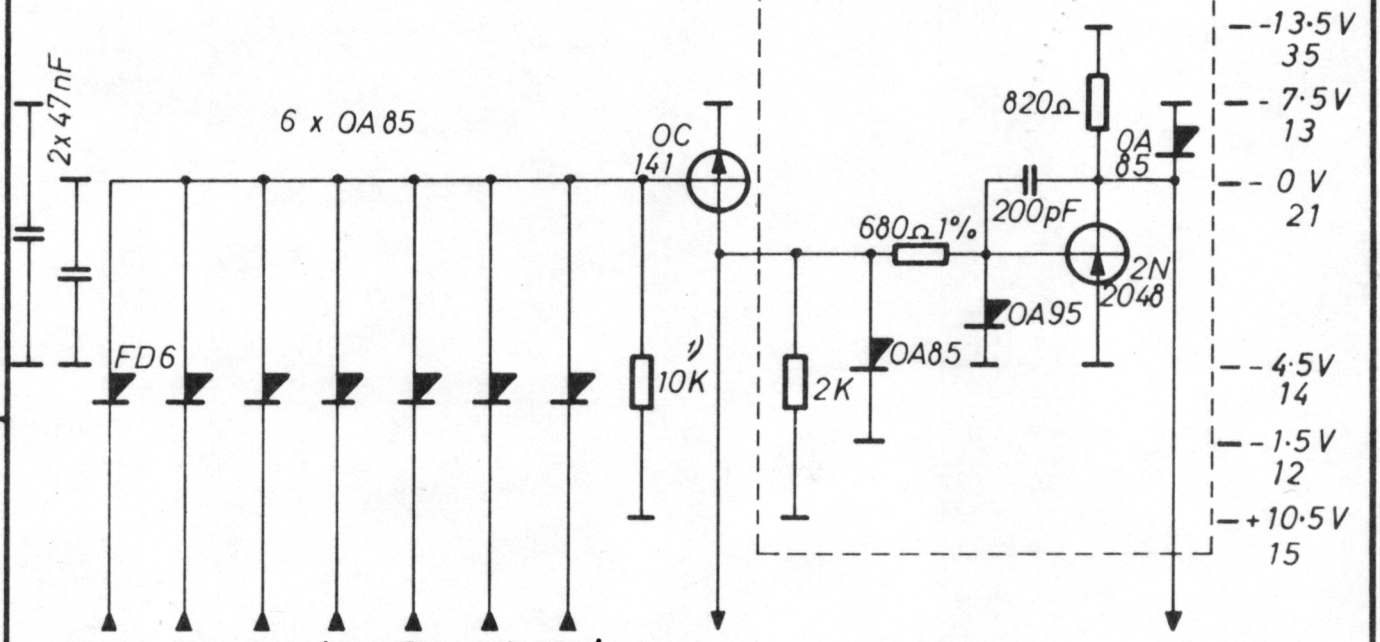

Mode	~~C~~	~~5~~	~~4~~	~~3~~	2	1	Out to condition	Out up	
10	1	2	3	4	6	8	30	23	A
10	1	2	3	4	6	7	31	24	B
10	1	2	3	4	5	8	32	25	C
10	1	2	3	4	5	7	33	26	D

BETINGELSE

høj i mode 2

OR fra 20-25

1) 5·1K in the following positions:

C4-1-A
C4-2-A
C4-4-C
C4-8-C
C4-12-B
C4-13-B,C and D
C4-14-D
C4-15-A and B
C4-16-C and D

en fast kombination på kort

disse ender sig på 1 kort

1 1
2 2

Unit: GIER 6	Designed H. I.	INSTRUCTION DECODING ALLE HØJE ⇒ AKTIV	Drawing No
REGNE CENTRALEN	Approved		Drawn by G.T. 23. 5. 66.
	Checked 1. 2. 62.		Checked F. E. 23-2-67
	Last Revision		1 Sheets / Sheet 1
			Pos. C 4 / 0222
			46

4 Circuits per card.

1 Circuit per card.

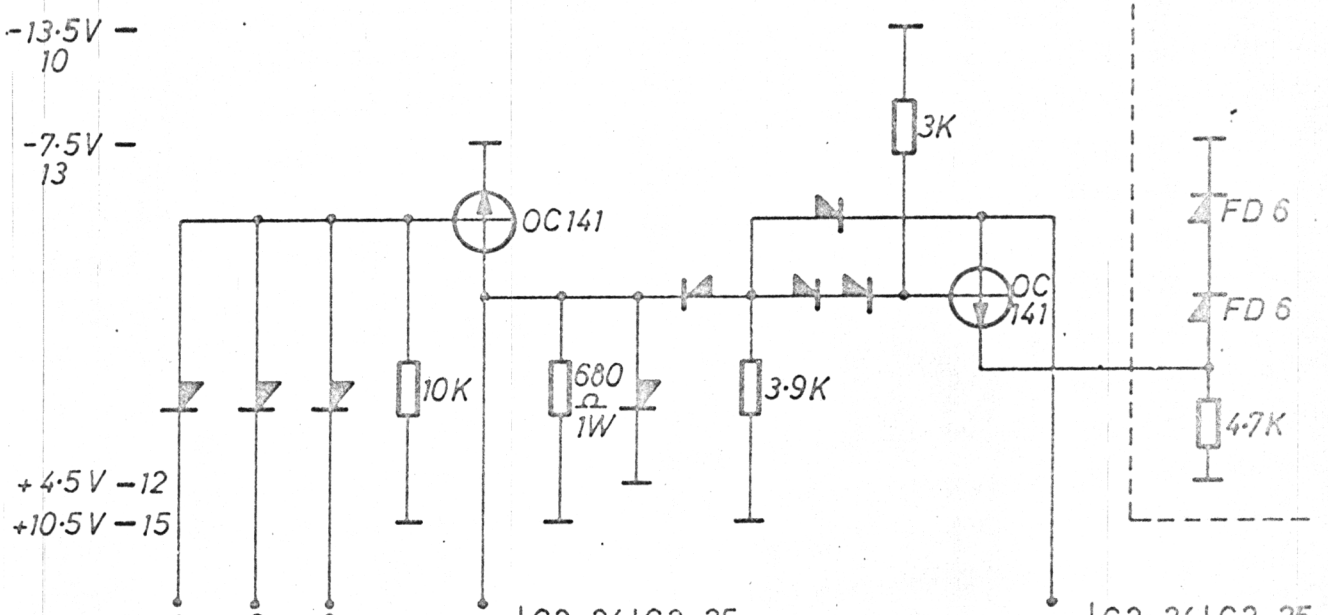

	C2-24	C2-25
30	R	O
31	Q	W
32	P	K
33	T	N

	C2-24	C2-25
23	$\overline{R}$	$\overline{O}$
24	$\overline{Q}$	$\overline{W}$
25	$\overline{P}$	$\overline{K}$
26	$\overline{T}$	$\overline{N}$

Unmarked Diodes : OA 85

Unit: GIER 6	Designed H. I.	DECODING OF IA	Drawing No
	Approved		Drawn by G.T. 23.5.62
CENTRALEN	Checked 1. 2. 62.		Checked E.E. 30-5-62
	Last Revision		1 Sheets / Sheet 1
			Pos. C 2 / 6222 - 1

4 Circuits per card.

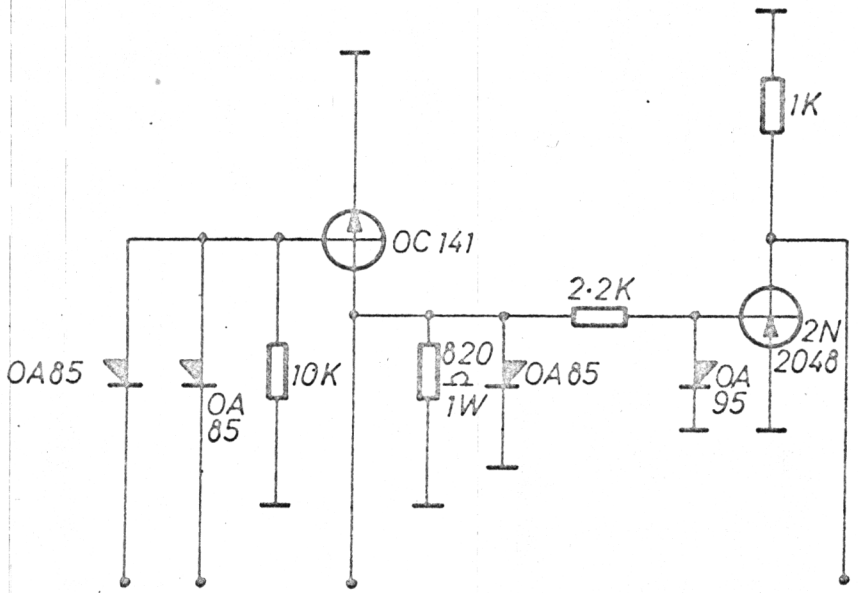

— -13·5 V 35
— - 7·5 V 13

— 0 V 14
— + 4·5 V 12
— + 10·5 V 15

OR_{33e}	6	8 OR_{34e}	30	B_3 (L)	23 B_3
OR_{33e}	6	7 OR_{34e}	31	B_2 (N)	24 B_2
OR_{33e}	5	8 OR_{34e}	32	B_1 (M)	25 B_1
OR_{33e}	5	7 OR_{34e}	33	B_0 (I)	26 B_0

Unit: GIER 6	Designed H. I.	DECODING OF I 0	Drawing No
SAAB CENTRALEN	Approved		Drawn by G.T. 23.5.60
	Checked I. 2. 6 2.		Checked R.E. 25-5-60
	Last Revision		1 Sheets Sheet 1
			Size A4 0222 - 2

4 Circuits per card.

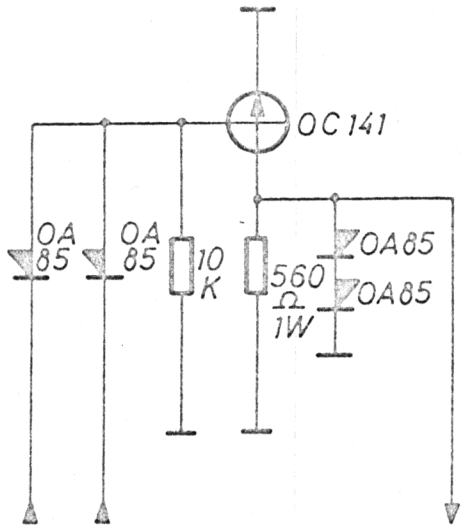

— -4·5 V 13

— -1·5 V 14

— +10·5 V 15

OR 28e	6	8	OR 29e	30
OR 28e	6	7	OR 29e	31
OR 28e	5	8	OR 29e	32
OR 28e	5	7	OR 29e	33

OR 28e ~ OR 30e
OR 29e ~ OR 31e

adresse modifikasjoner

Unit: GIER 6	Designed H. I.	DECODING OF OR 28-29 OR 30-31	Drawing No
	Approved		Drawn by 6.1. 20. 3. 62.
CENTRALEN	Checked 1. 2. 62.		Checked F. E. 28-3-62
	Last Revision		1 Sheets Sheet 1
			0222-3

7 Circuits on each Card

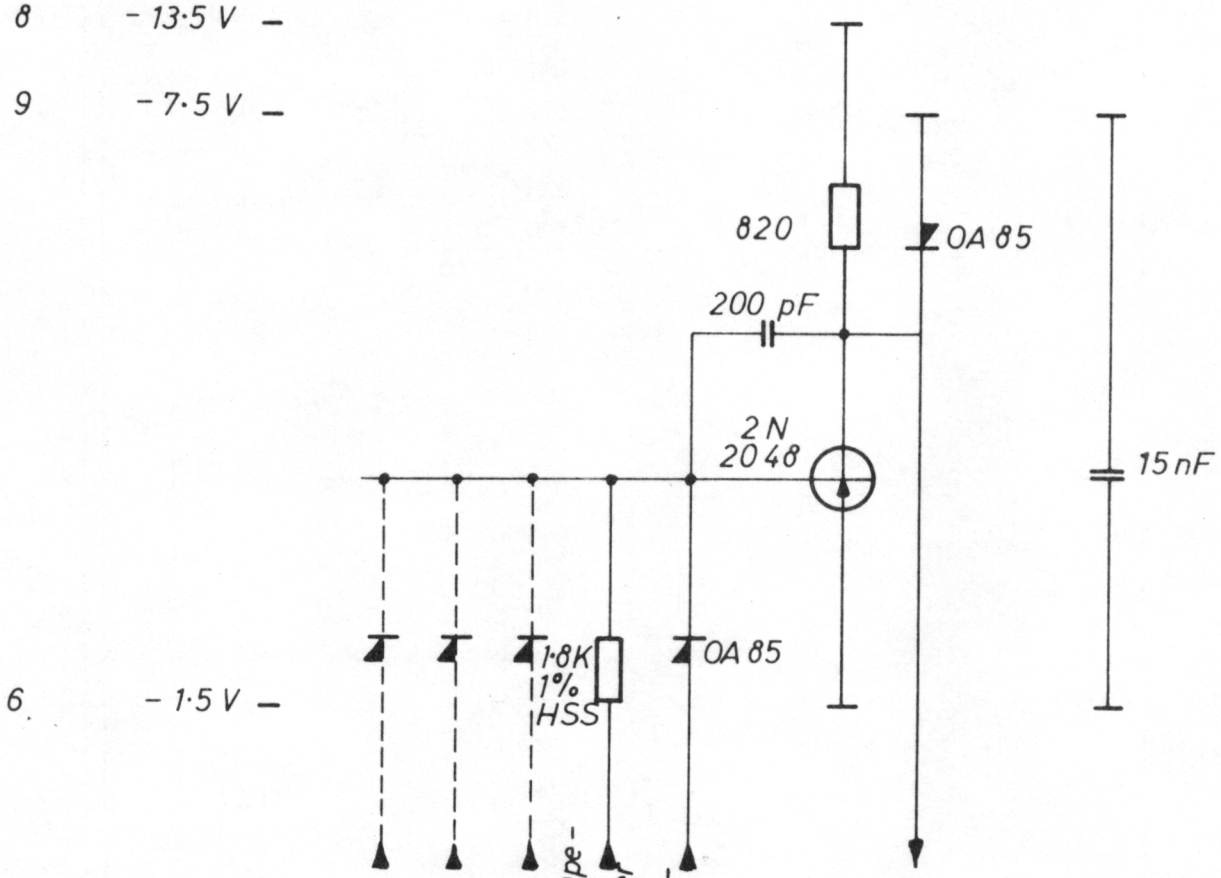

Diodes connected to Pin 7, 5, 4, 3, 2, 1 according to following Diagram.

From Operation Transfer	Condition	Out	
10	11	12	Amplifier 1
13	14	15	— 2
21	22	23	— 3
24	25	26	— 4
27	28	29	— 5
30	31	32	— 6
33	34	35	— 7
M	D	C	

~~overste~~ nederste D
til ark 2
fra H

Unit: GIER 6	Designed H.I.	CONDITION DECODING	Drawing No
			Drawn by B.R. 20. 1. 66.
A/S REGNE CENTRALEN	Approved		Checked F.E. 23-2-67
	Checked 1. 2. 62.		2 Sheets / Sheet 1
	Last Revision		Pos. C-5 / 0223

47

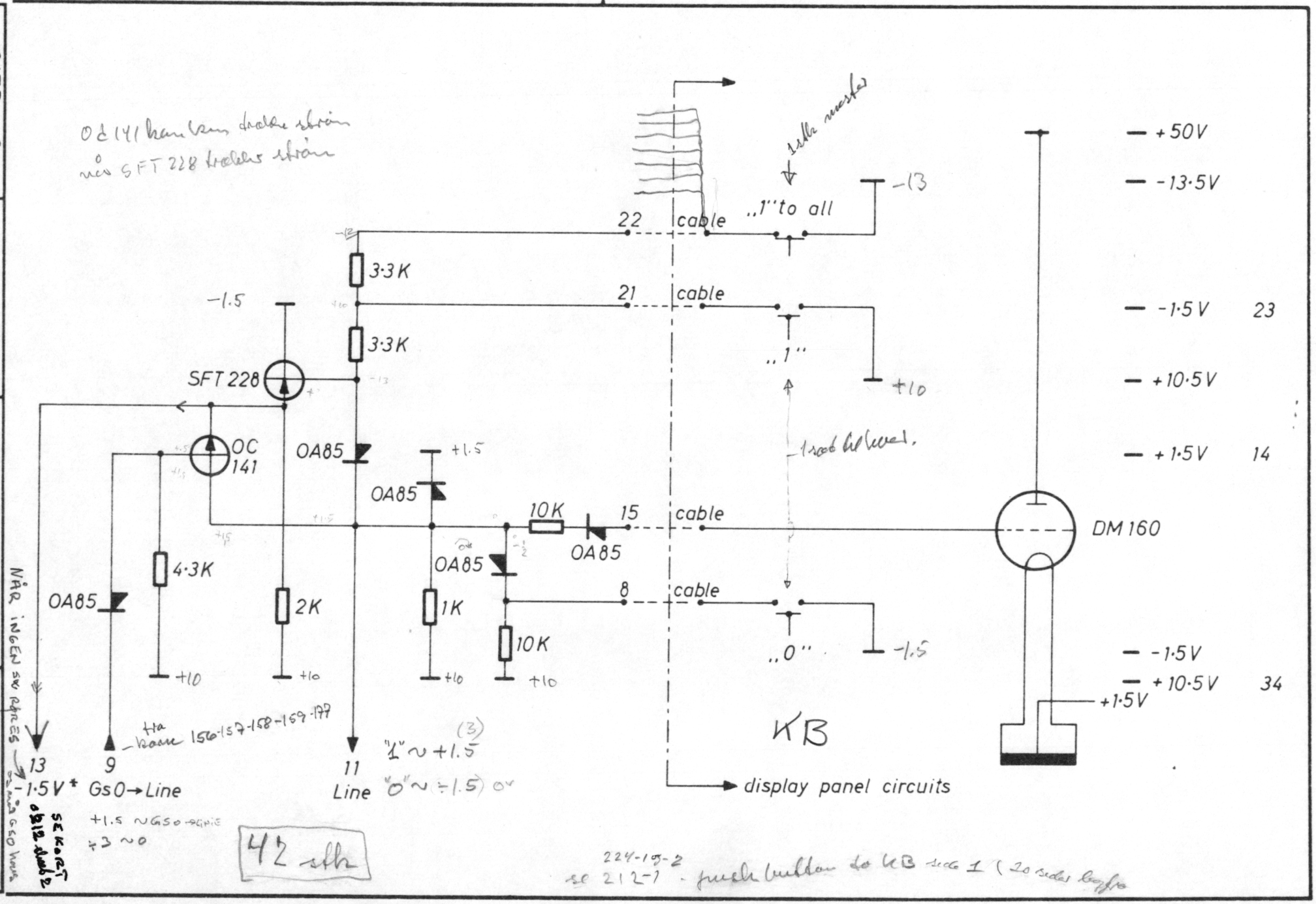

Unit: GIER 6		Designed H.I.	
$ REGNE CENTRALEN		Approved	Checked 1.2.62.
Last Revision		OR-TI-O AND LINE CIRCUIT	
Drawing No			
Drawn by B.R. 20.1.66.			
Checked F.E. 23-2-67			
Pos. A6-B5	02248-18-2	3 Sheets	Sheet 2

Error into MA.

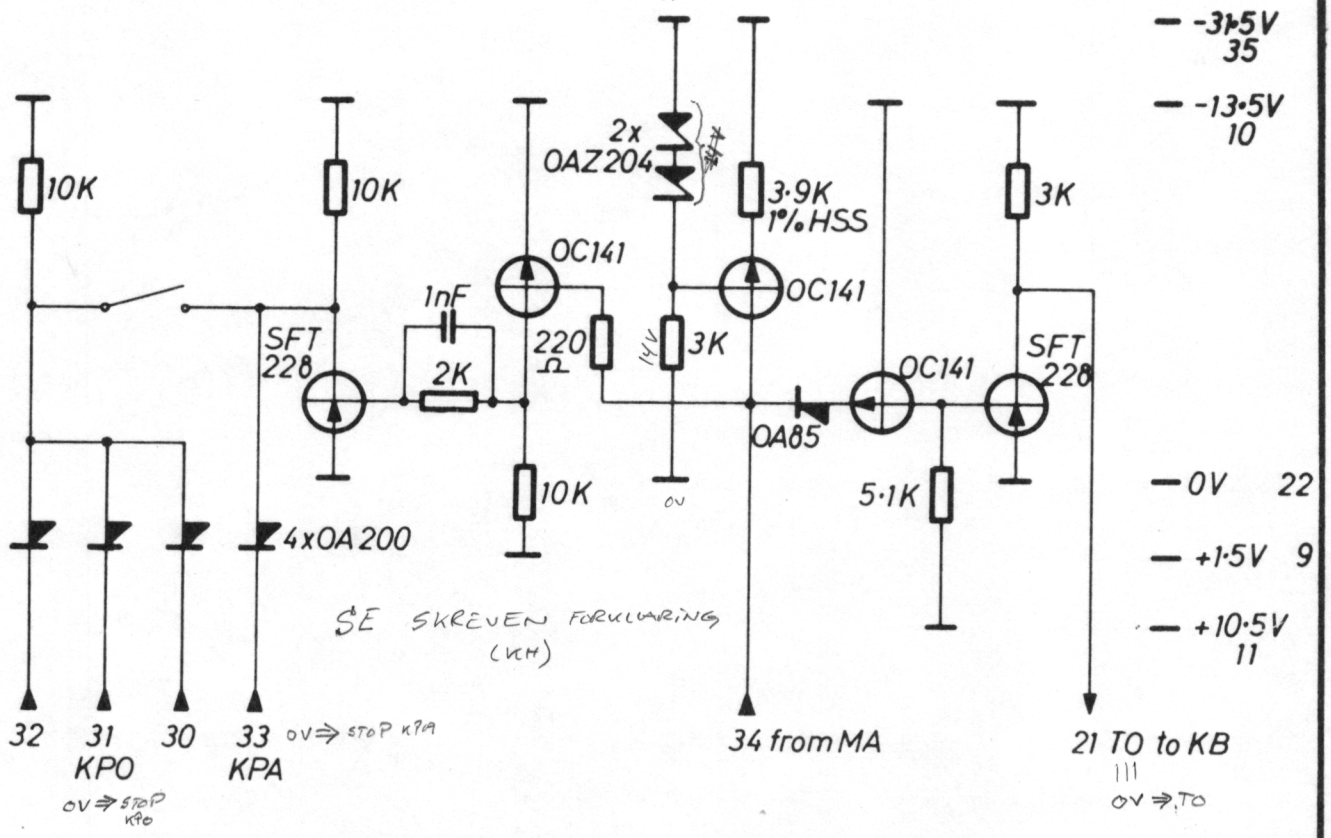

Overflow.

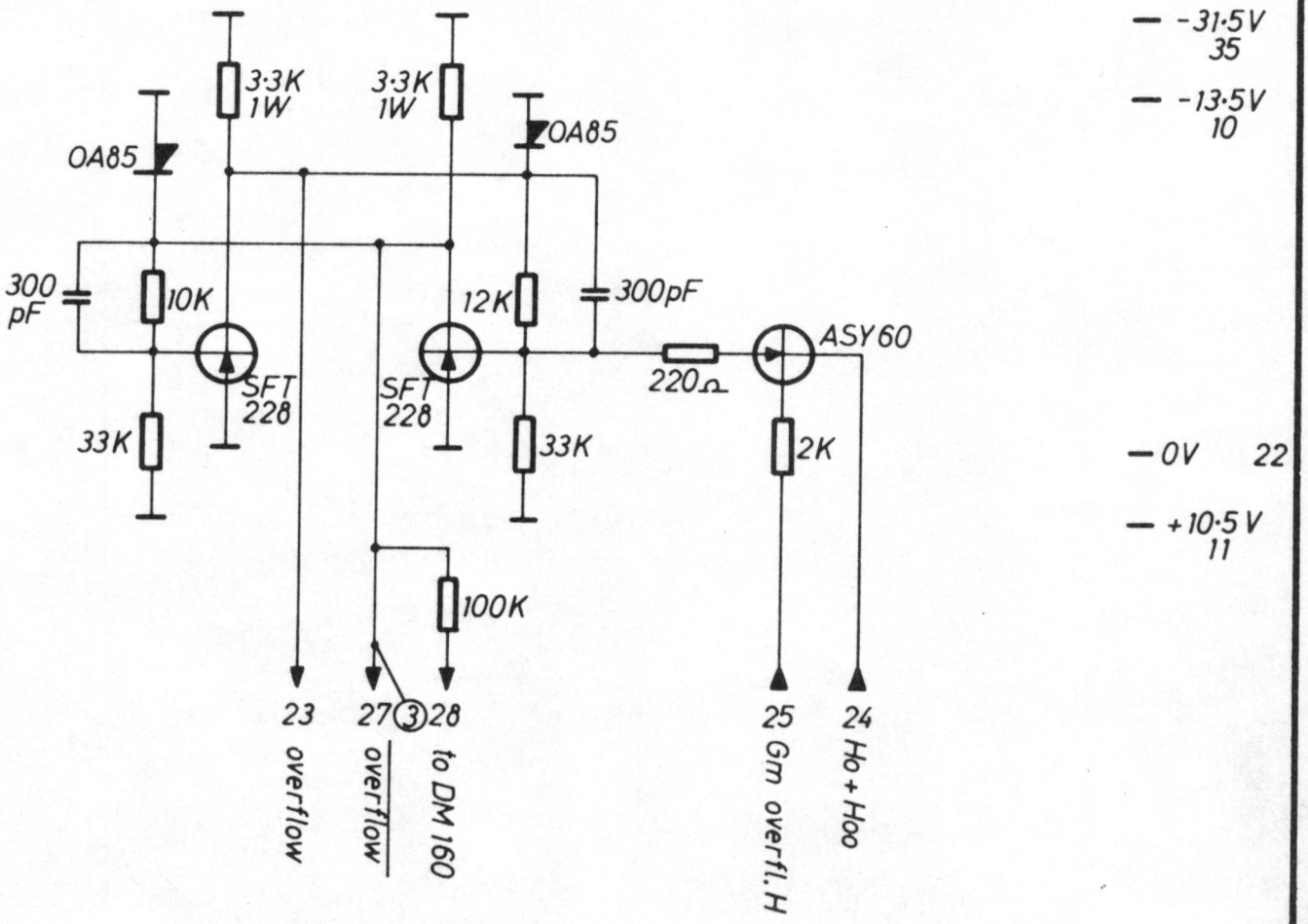

Unit: GIER 6	Designed H. I.	LINE$_{00}$, INHIBIT ADVANCE, ERROR INDICATOR IN MA, OVERFLOW FL. FL.	Drawing No
REGNE CENTRALEN	Approved		Drawn by G. T. 9. 6. 66
	Checked 1. 2. 62.		Checked F. E. 22-2-67
	Last Revision		2 Sheets / Sheet 1
			A2 - 5 / 229

Unmarked Transistors: SFT 228
Diodes: OA85

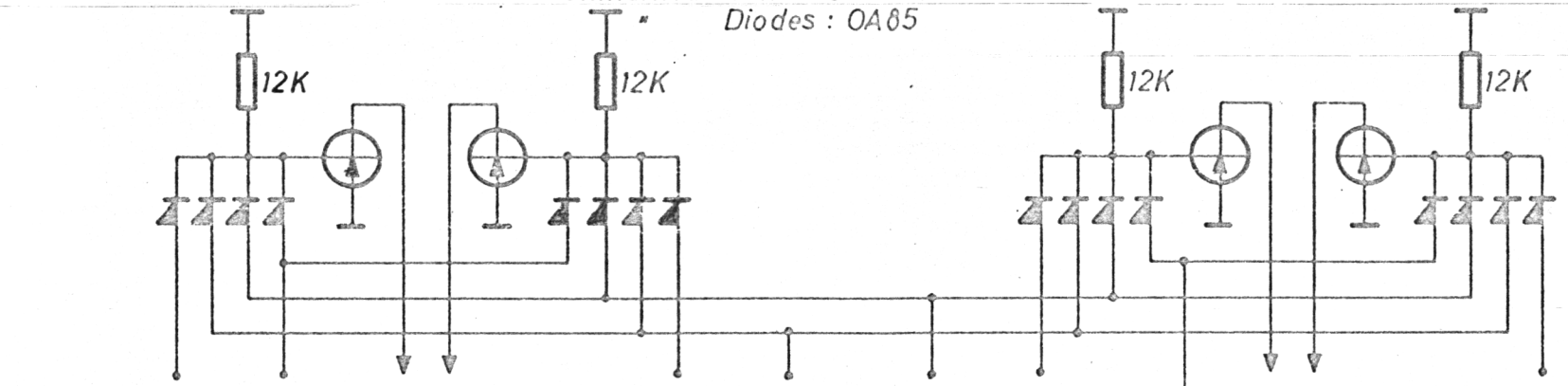

	31	28	15	14	32	30	29	33	26	27	34
C1-18	H40	OR38-Bo	$\overline{Pa}$	Pa	$\overline{H40}$	P	Gm10	H41	$\overline{Pb}$	Pb	$\overline{H41}$
C1-19	H40	OR38-Bo	$\overline{Ra}$	Ra	$\overline{H40}$	R	Gm10	H41	$\overline{Rb}$	Rb	$\overline{H41}$
C1-20	S	OR38-Bo	$\overline{Oa}$	Oa	$\overline{S}$	O	Gm10	S	$\overline{Ob}$	Ob	$\overline{S}$

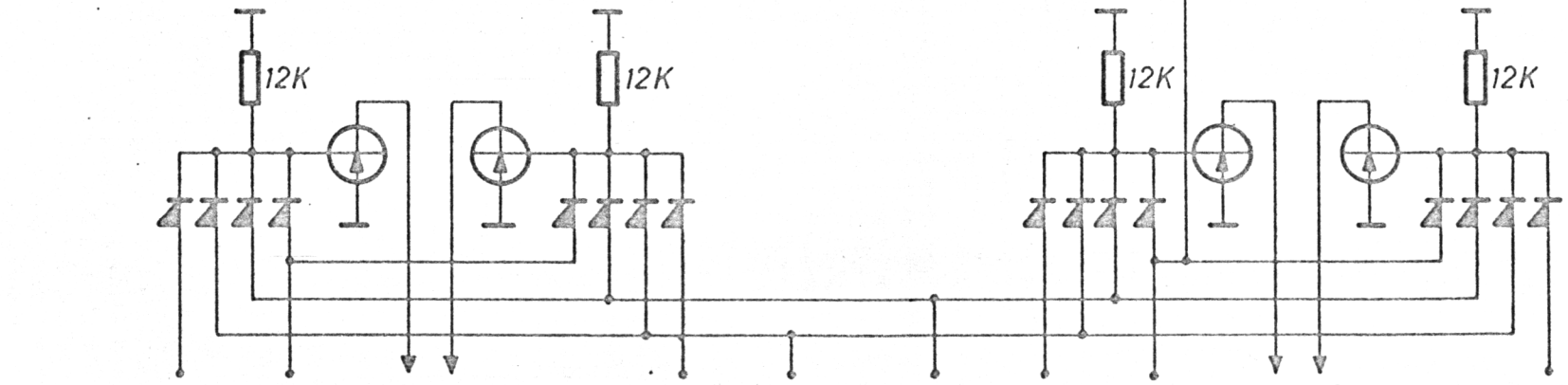

	8	11	4	3	7	10	9	6	12	2	1	5
C1-18	H00	OR38-Bo	$\overline{Ta}$	Ta	$\overline{H00}$	Gm10	T	H00	OR39-Bo	$\overline{Tb}$	Tb	$\overline{H00}$
C1-19	H40	OR38-Bo	$\overline{Qa}$	Qa	$\overline{H40}$	Gm10	Q	H41	OR39-Bo	$\overline{Qb}$	Qb	$\overline{H41}$
C1-20	w	OR38-Bo	$\overline{Oa}$	Oa	$\overline{w}$	Gm10	W	w	OR39-Bo	$\overline{Ob}$	Ob	$\overline{w}$

S ~ overflow from overflow fl. fl., w = 0 for (AC) ≠ 0, W = 1 for (AC) = 0, Gm10 ~ set indicator.

CENTRALEN

Unit: GIER 6

Designed H. L.

Approved

Checked 1.2.62.

Last Revision

CONTROL OF INDICATOR

Drawing No

Drawn by G. T. 13. 6. 62

Checked F. E. 22-2-62

Sheets 1

Sheet 1

C 7

0231

CENTRALEN

Unit: GIER 6

Designed H.I.

Approved

Checked I. 2. 62.

Last Revision

INDICATOR OPERATIONS

Drawing No

Drawn by B.R. 6.10.06.

Checked F.E. 22-2-67

2 Sheets

Sheet 1

Pos. C1

0233

2 Circuits per Card

−13·5 V 23

−3 V 22

9·1K

1K

1K

OC 141

OA 200

OA 85

OA 85

OA 85

OA 85

OA 85

OA 85

3K

HG 5002

OA 85

HG 5002

OA 85

+10·5 V 25

x

Int. Conn.

		21 21	4 5	5 5	13 15	6 7	9 9	10 11	14 14
C1-25	Line 41' Out			OR39e		O_b Tb	B'3	$\overline{O_b}$ $\overline{Tb}$	$\overline{B'3}$
C1-24	Line 41' Out			OR39e		Pb Qb	B'3	$\overline{Pb}$ $\overline{Qb}$	$\overline{B'3}$
C1-23	Line 41' Out			OR39e		Rb H41	B'3	$\overline{Rb}$ $\overline{H41}$	$\overline{B'3}$
C1-22	Line 41' Out			OR39e		Kb Ob	B'3	$\overline{Kb}$ $\overline{Ob}$	$\overline{B'3}$
C1-21	Line 41' Out			OR38e	$\overline{T}$	AC_{00}	B'3	$\overline{AC_{00}}$	$\overline{B'3}$

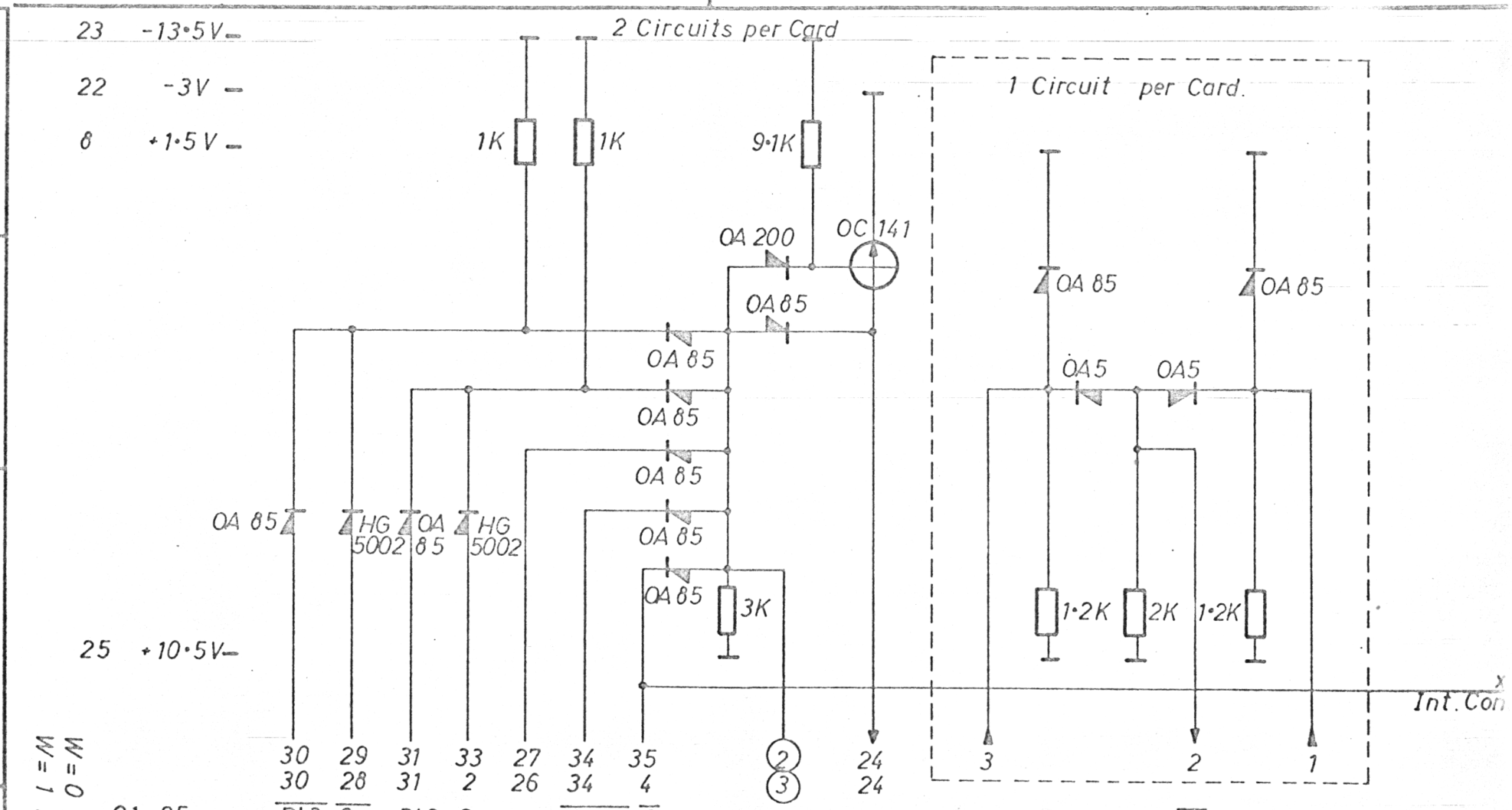

Unit: GIER 6

CENTRALEN

Designed H.I.

Approved

Checked 1.2.62.

Last Revision

INDICATOR OPERATIONS

Drawing No

Drawn by B.R. 6.10.61

Checked F.E. 22-2-62

2 Sheets Sheet 1

Pos C1 0233

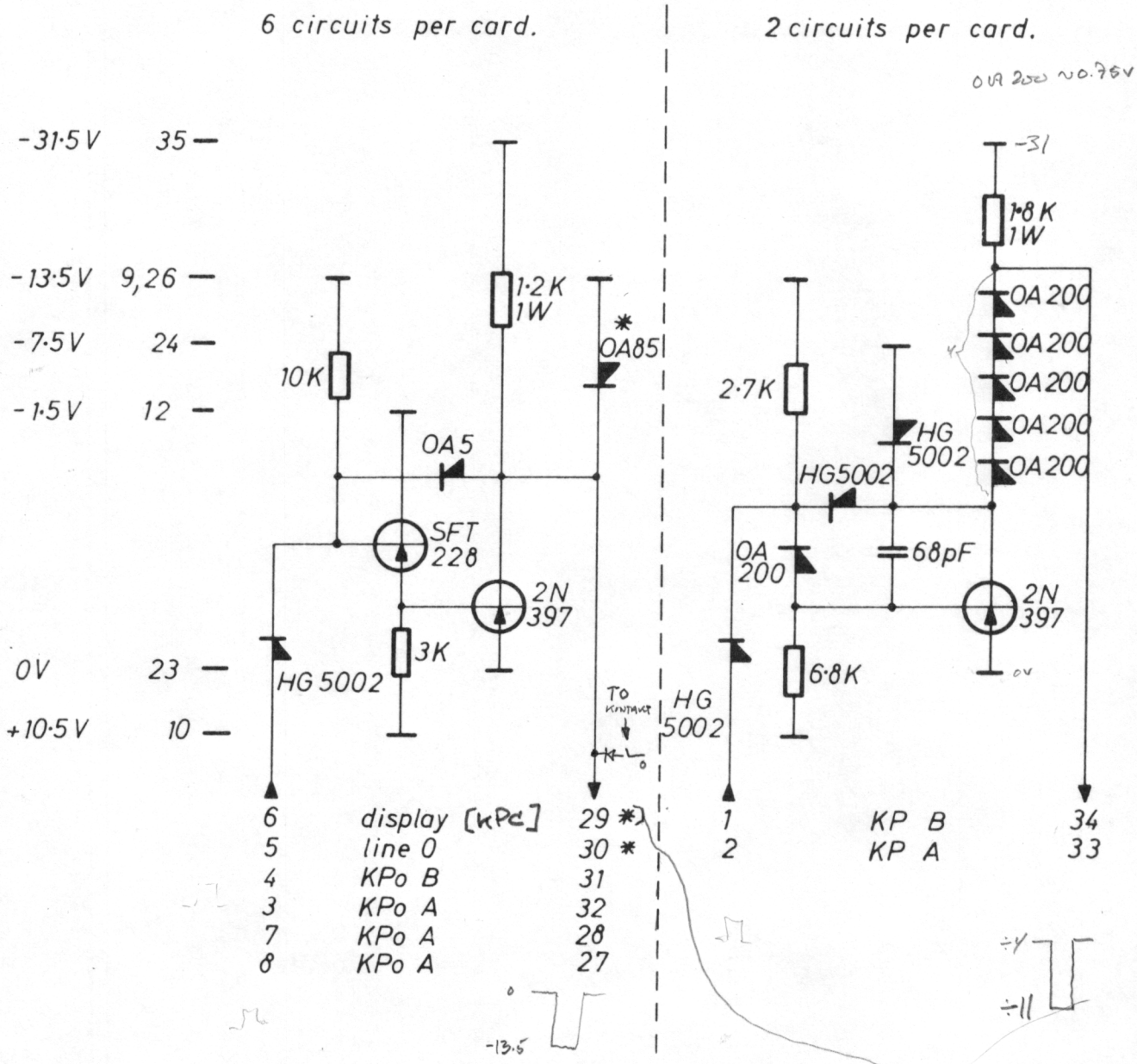

* OA85 connected to -7·5V on amplifier display and line 0.

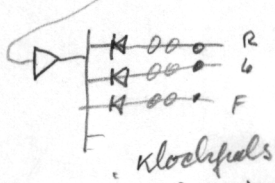

Se Start-stop circuit

se side 63

klockpuls C fåres ind på forsk reg. valgt v.h.a. veloerne i KB ord hernæd kan registre ondres

Unit: GIER 6	Designed H. I.	CLOCK PULSE AMPLIFIER	Drawing No
			Drawn by G.T. 16.5.66
REGNE CENTRALEN	Approved		Checked F.E. 23-2-67
	Checked 1. 2. 62.		1 Sheets / Sheet 1
	Last Revision		A1 - 18 / 292

50

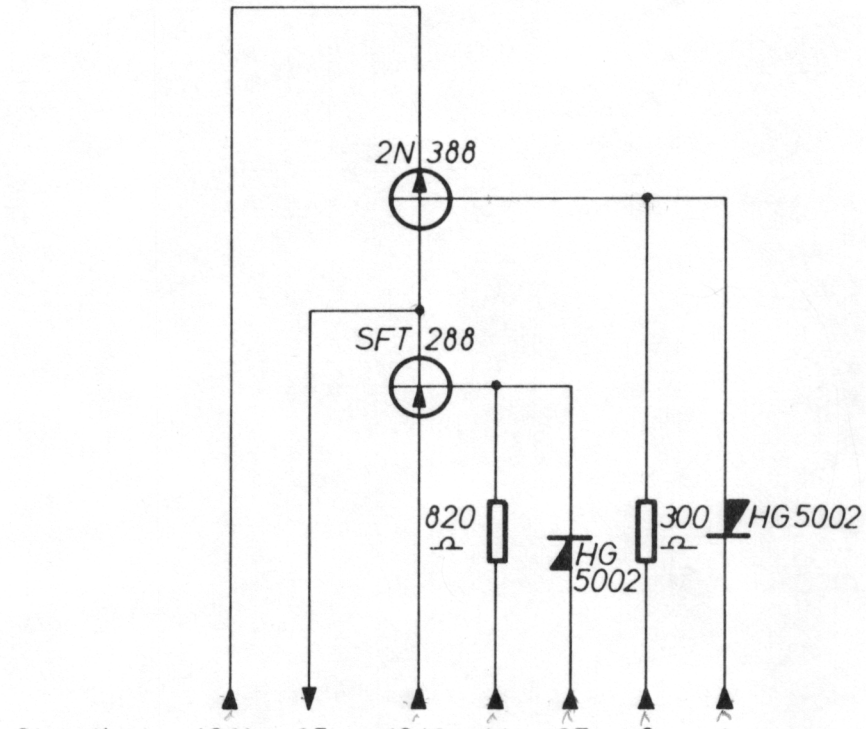

Circuit	A:	10,11	35	12,13	14	27	9	1
"	B:	"	34	"	"	26	"	2
"	C:	"	33	"	"	25	"	3
"	D:	"	32	"	"	24	"	4
"	E:	"	31	"	"	23	"	5
"	F:	"	30	"	"	22	"	6
"	G:	"	29	"	"	21	"	7
"	H:	"	28	"	"	15	"	8
			I-Write	Out	I-Read	RB_L	RA_L	WB_H	WA_H

W_A -1.5 / -3

R_A 0 / -7.5

R_A +10,5 / 0

BET

BET

-13

se side

60

(1232)

se side 1-5-6

RB gWB Kommer fra 1 af 4 dekoderen (100Z)

RA WA -"- -"- inhibit 7 af 8 gate (1003)

Unit: GIER 6	Designed H. I.	MATRIX DRIVER	Drawing No
REGNE CENTRALEN	Approved		Drawn by G.T. 25.7.66
	Checked 1. 2. 62.		Checked F.E 22-2-67
	Last Revision		1 Sheets / Sheet 1
			B1-41-48 / 1001-1

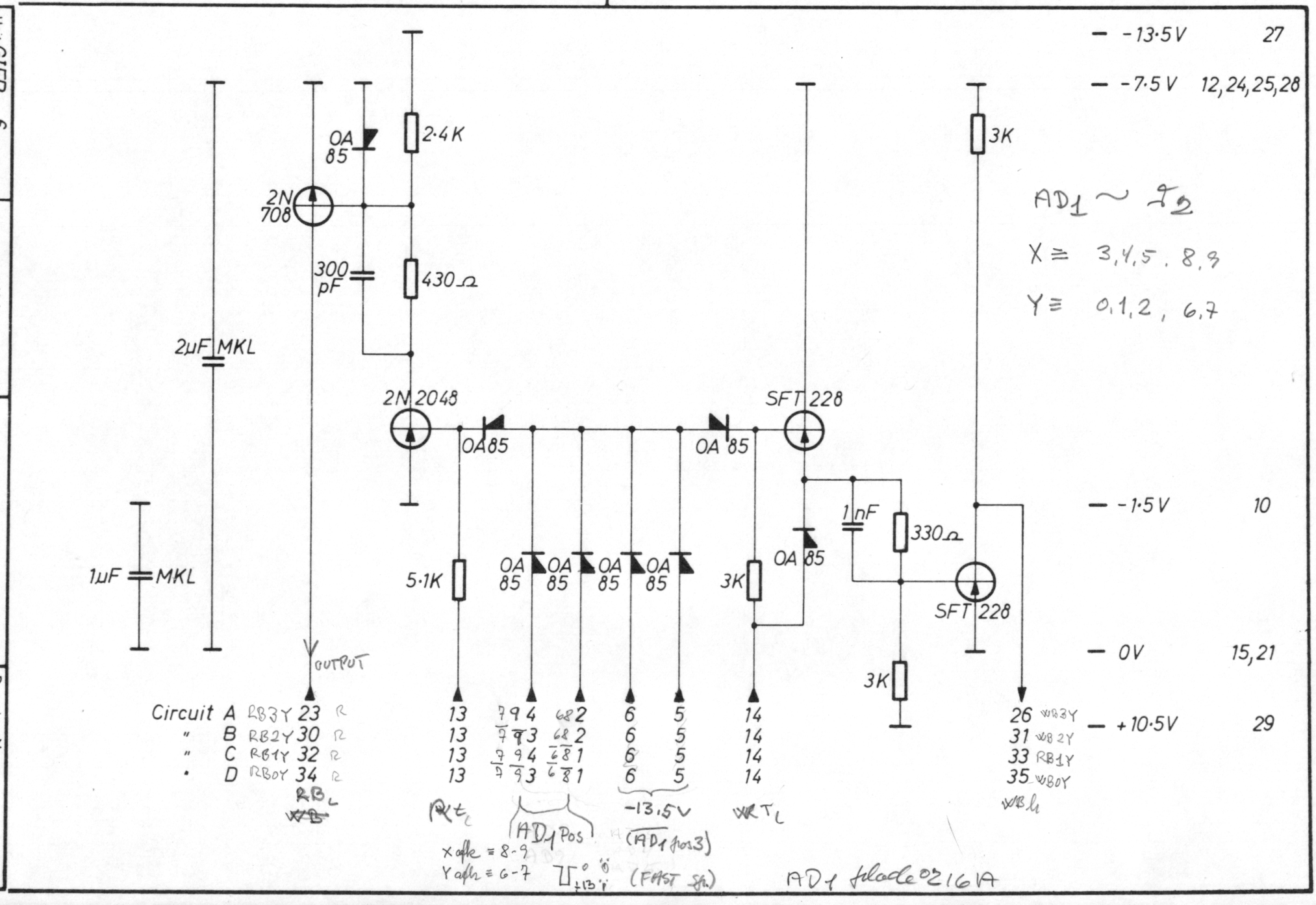

Unit: GIER 6

Designed H.I.

Approved

Checked 1.2.62.

Last Revision

$ REGNE CENTRALEN

WB + RB

Drawing No

Drawn by G.T. 4.7.66

Checked F.E. 22-2-67

1 Sheets

Sheet 1

BI-35-36

1002-1

52

Unmarked Diodes: OA 85

VALGT

4 kredsløb [illegible]

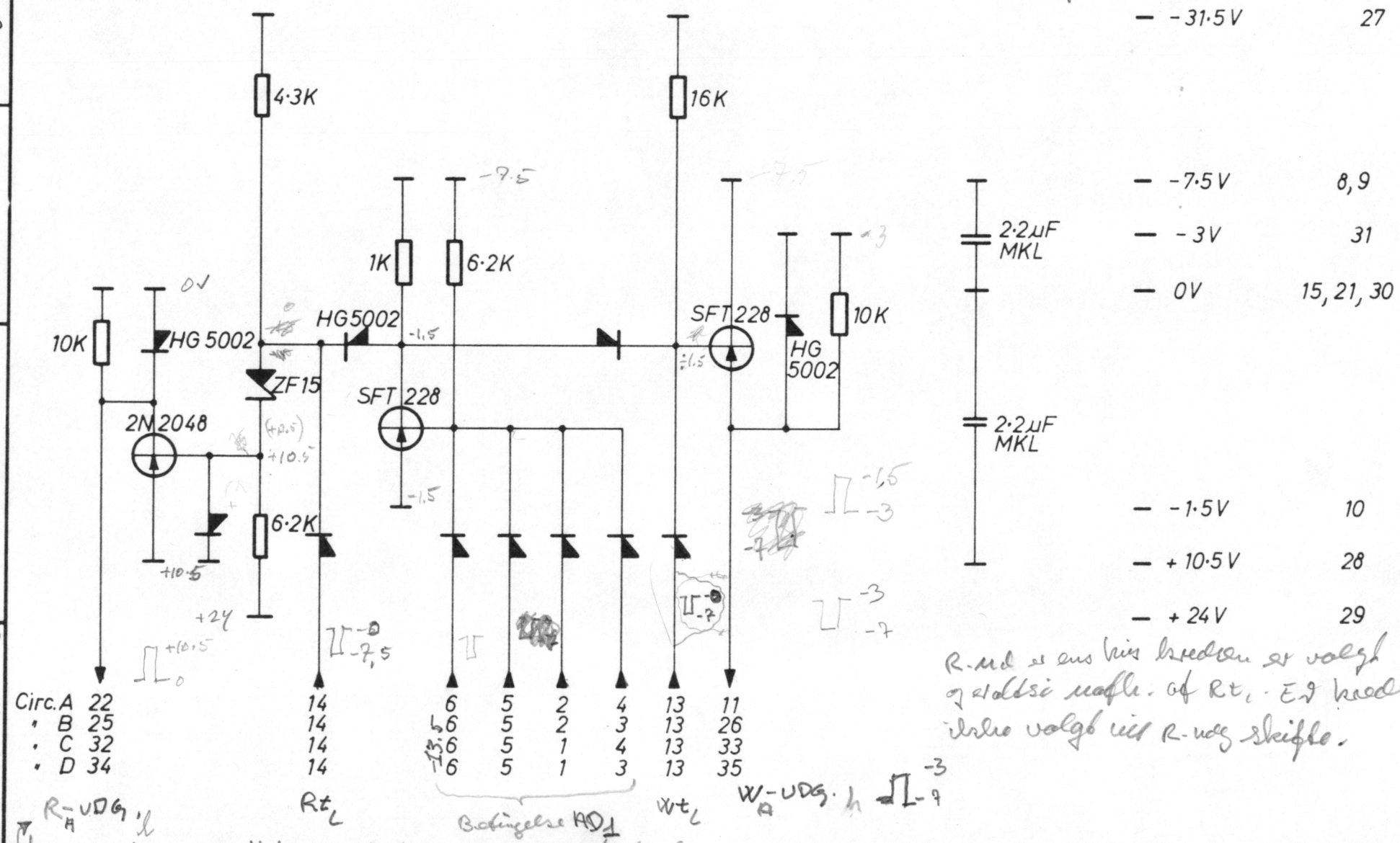

R-ud er ens kis kredsen er valgt og er altsi nafh. af Rt. Ed kredsen ikke valgt ind R-udg skifte.

kun positiv mår in ikke kor rigtig afh. og Rt. Ed bet. opfyldt → RA 0 uanset Rt

Unit: GIER 6	Designed H. I.
REGNE CENTRALEN	Approved
	Checked 1. 2. 62.
	Last Revision

WA + RA

Drawing No	
Drawn by G.T. 4.7.66	
Checked F.E. 22-2-67	
1 Sheets	Sheet 1
B1-37-40	1003-1

53

Unit GIER 6	Designed H.I.	
REGNE CENTRALEN	Approved	
	Checked 1.2.62.	
	Last Revision	

DELAY

Drawing No	
Drawn by G.T. 29.9.66	
Checked F.E. 22-2-67	
1 Sheets	Sheet 1
A1-16	1006A-15

54

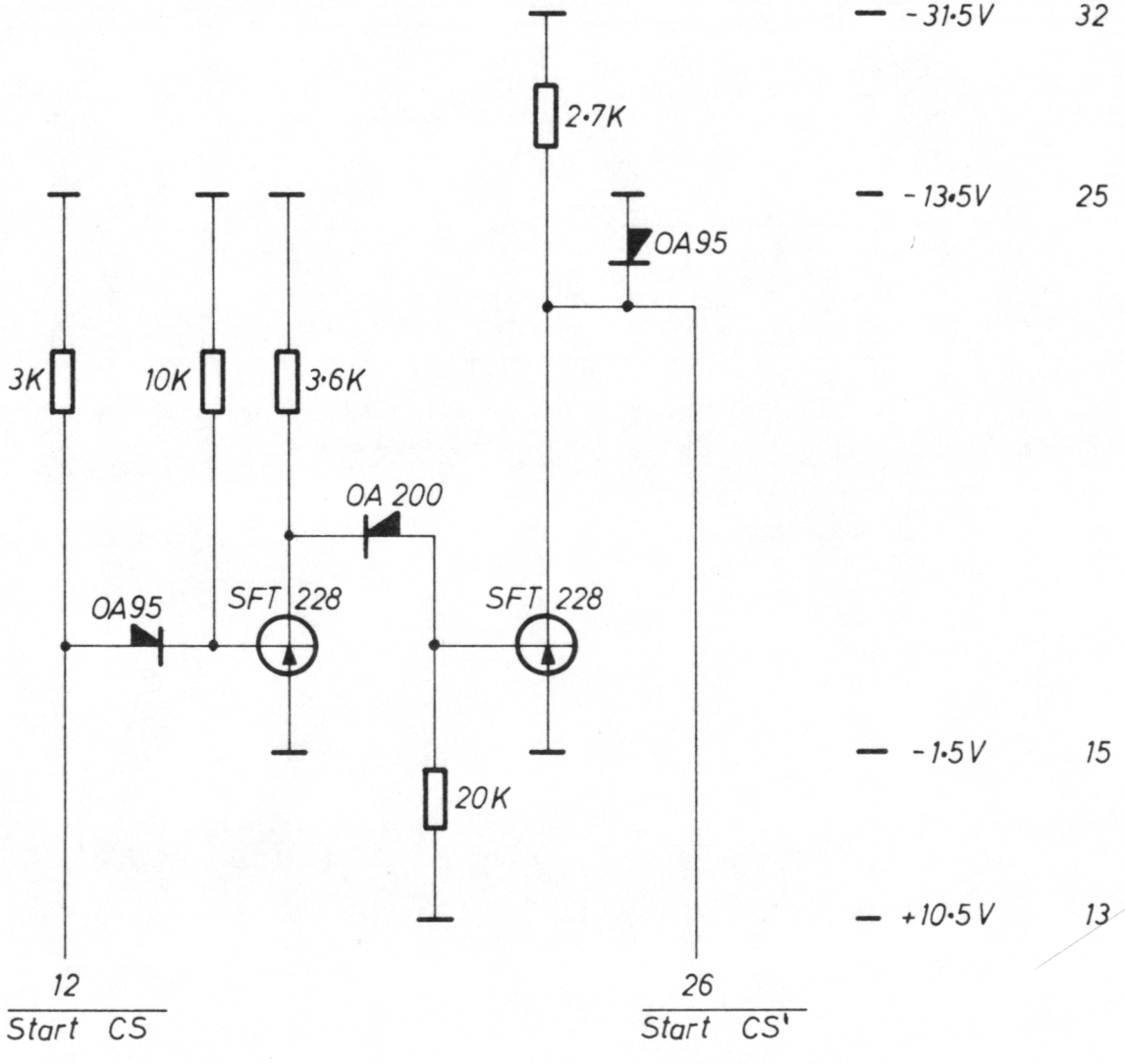

ca 0,2 μs delay

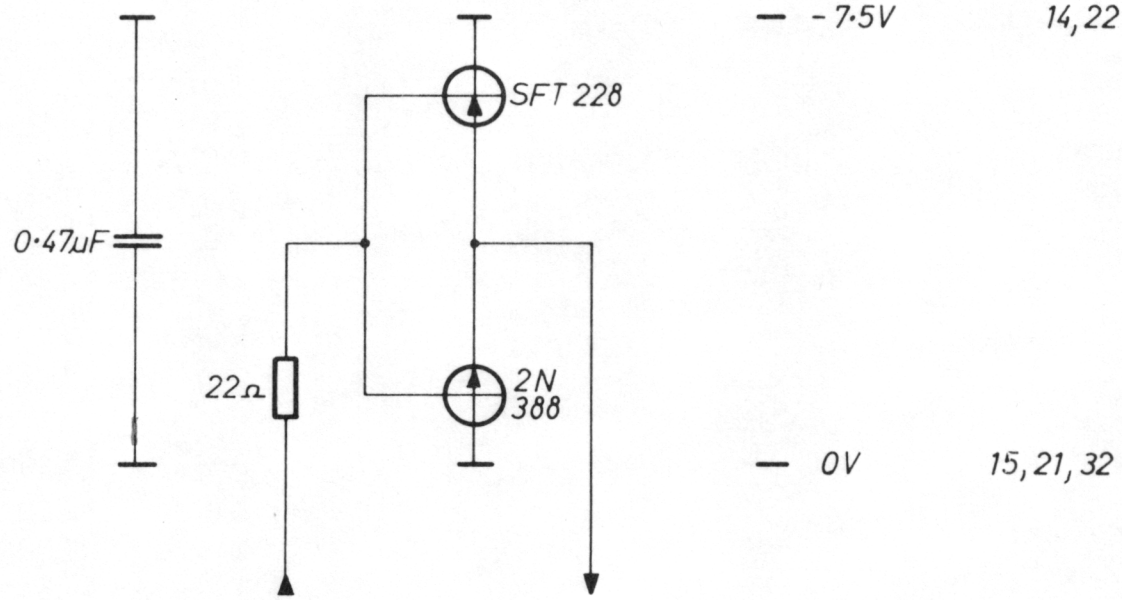

Circuit	A	11	12
"	B	9	10
"	C	7	8
"	D	5	6
"	E	3	4
"	F	1	2
"	G	23	24
"	H	25	26
"	I	27	28
"	J	29	30
"	K	31	33
"	L	34	35

-7.5

RT_L

reset read/write_L

strobe form_L

Unit GIER 6	Designed H. I.	AMPLIFIERS	Drawing No
REGNE CENTRALEN	Approved		Drawn by G.T. 30. 6. 66
	Checked 1. 2. 62.		Checked F.E 22-2-67
	Last Revision		1 Sheets / Sheet 1
			B1-34 / 1020

55

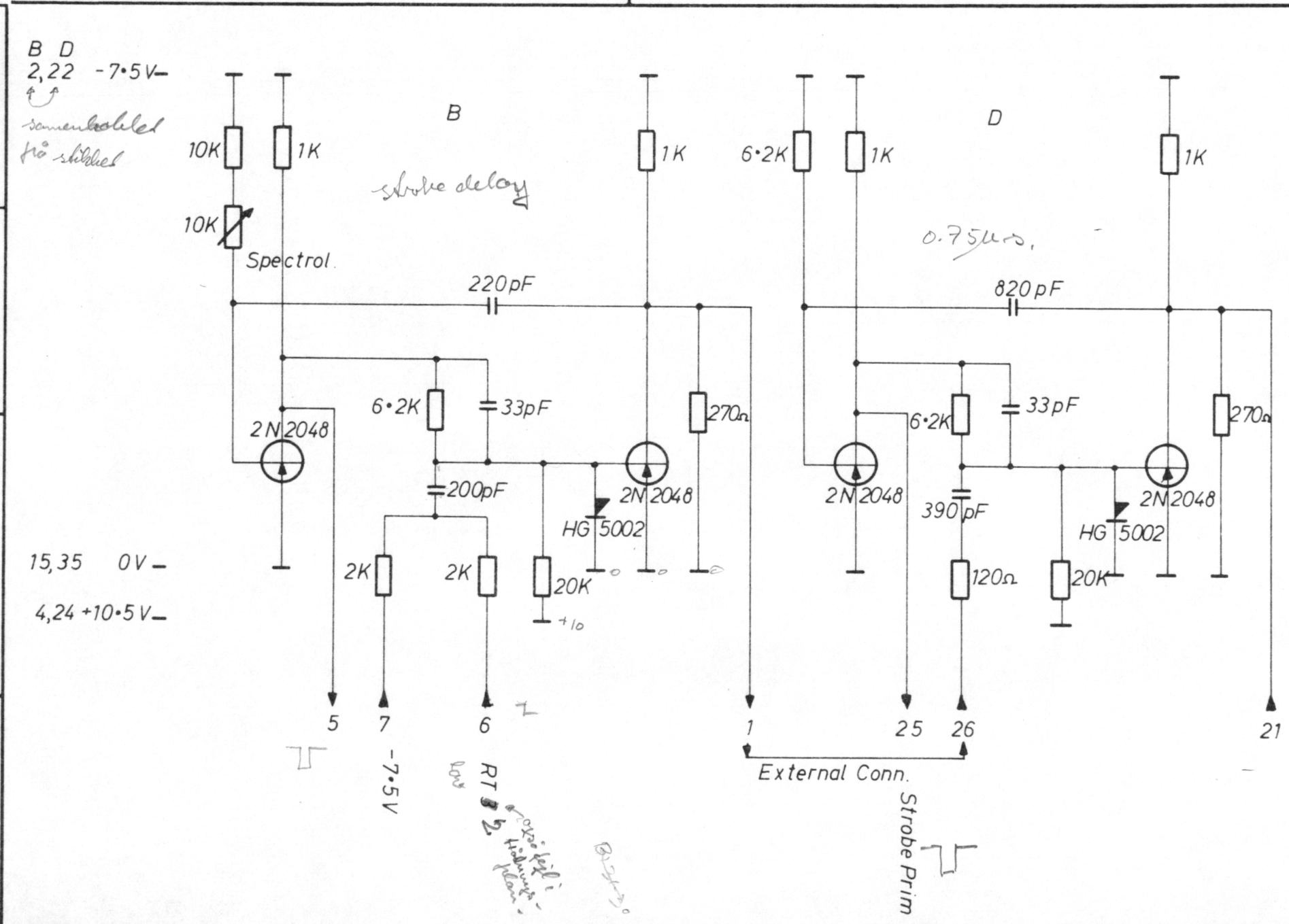

STROBE DELAY + STROBE PRIM.

Unit GIER 6	Designed H.I.
CENTRALEN	Approved
REGNE	Checked 12.62
	Last Revision
Drawing No B1-33	Drawn by B.R. 7.10.66
Sheets 2	Checked F.E.
Sheet 1	1021

56

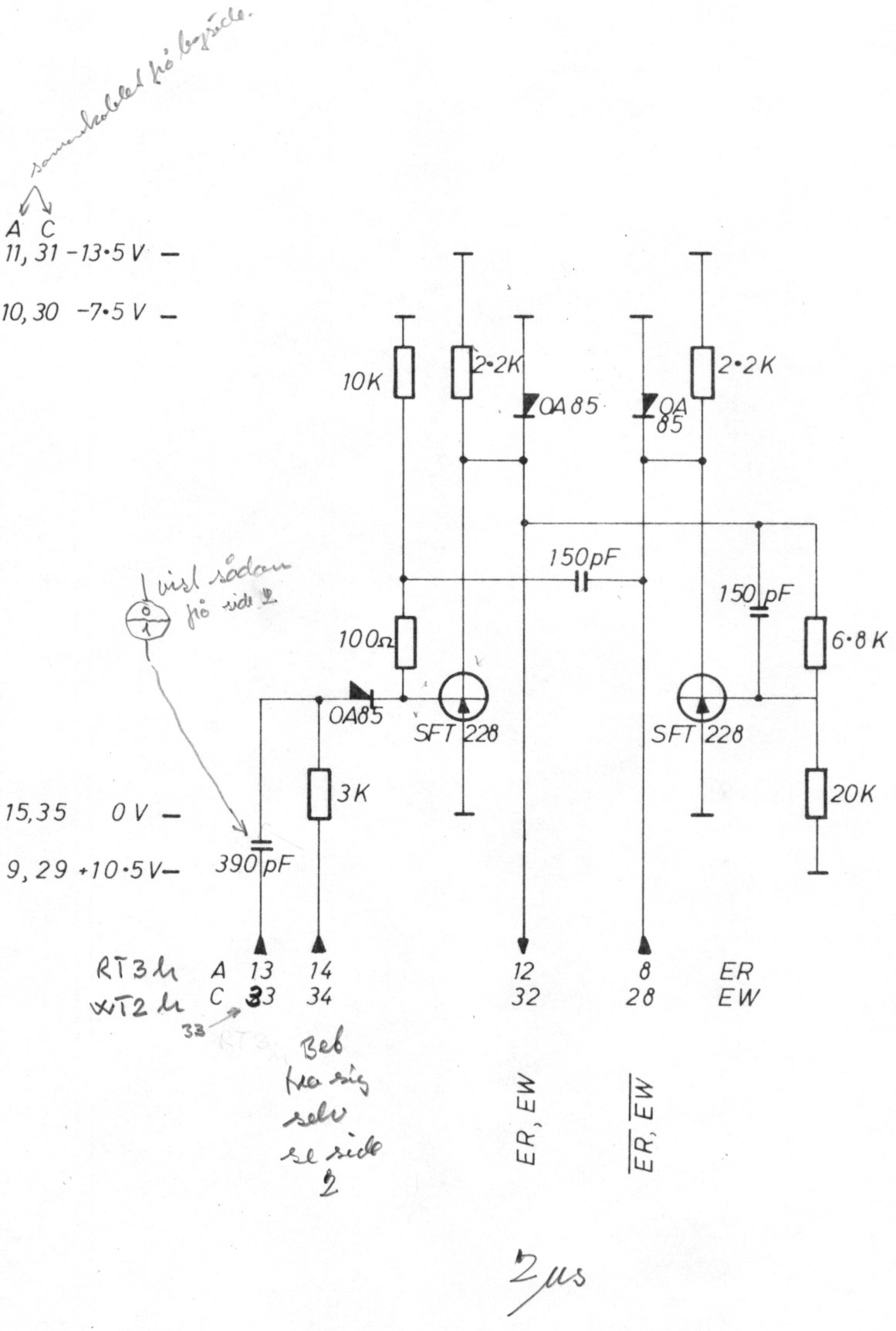

Unit CIER 6	Designed H. I.	MONO STAB END READ + END WRITE	Drawing No
REGNE CENTRALEN	Approved		Drawn by B. R. 7. 10. 66
	Checked 1. 2. 62.		Checked F. E.
	Last Revision		2 Sheets / Sheet 2
			B1-33 / 1021
			57

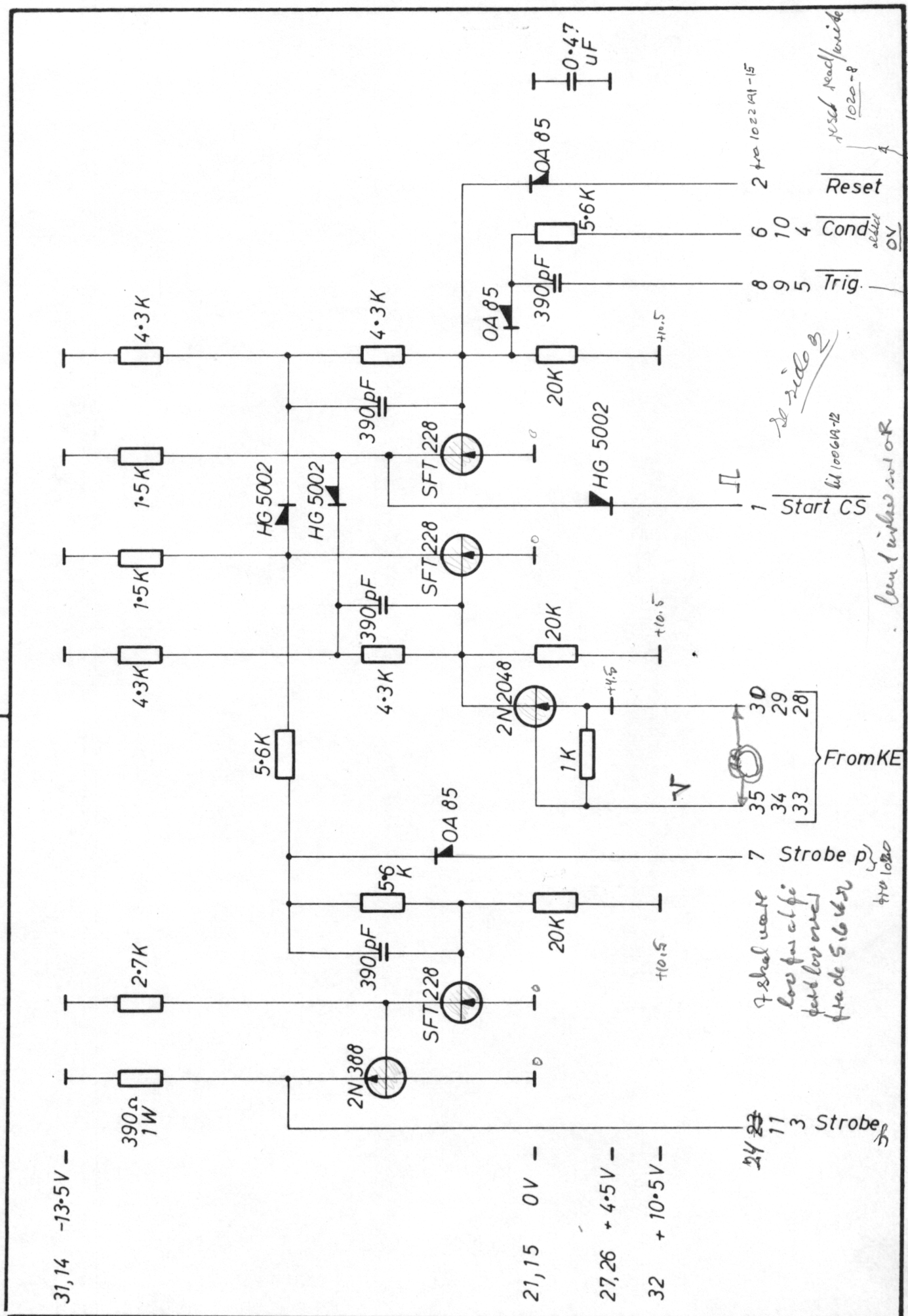

Unit: GIER 6	Designed H.I.	STROBE-SELECTOR	Drawing No
REGNE CENTRALEN	Approved		Drawn by B.R. 5. 10. 66
	Checked 1. 2. 62.		Checked F.E. 22-2-67
	Last Revision		1 Sheets / Sheet 1
			A1-14-15 / 1022

58

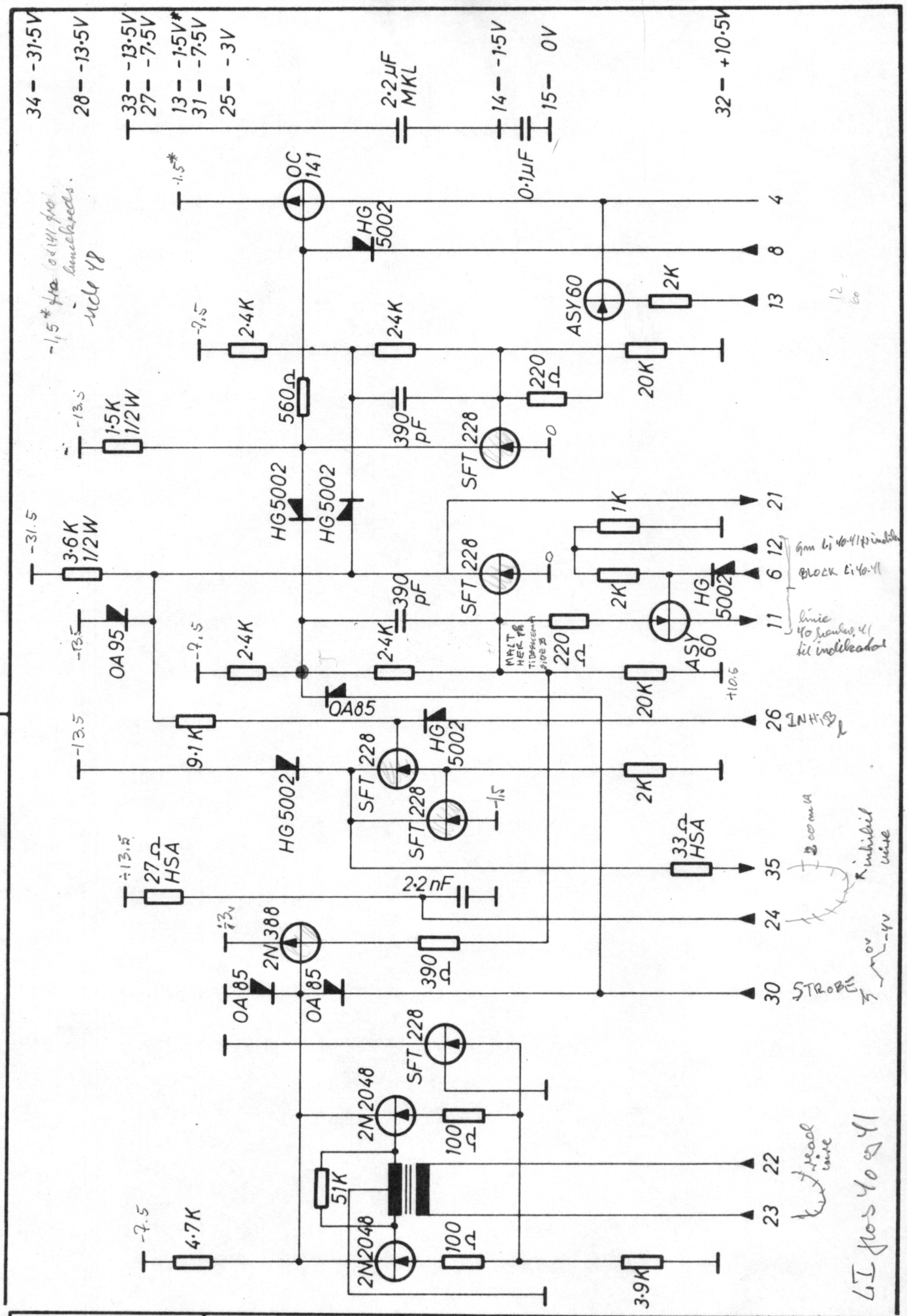

Unit: GIER 6	Designed H.I.	CS READ AMPLIFIER + BUFFER + INH	Drawing No
REGNE CENTRALEN	Approved		Drawn by G.T. 26.7.66
	Checked 1.2.62.		Checked F.E. 23-2-67
	Last Revision		2 Sheets / Sheet 1
			B2-49-50 / 1024-1

59

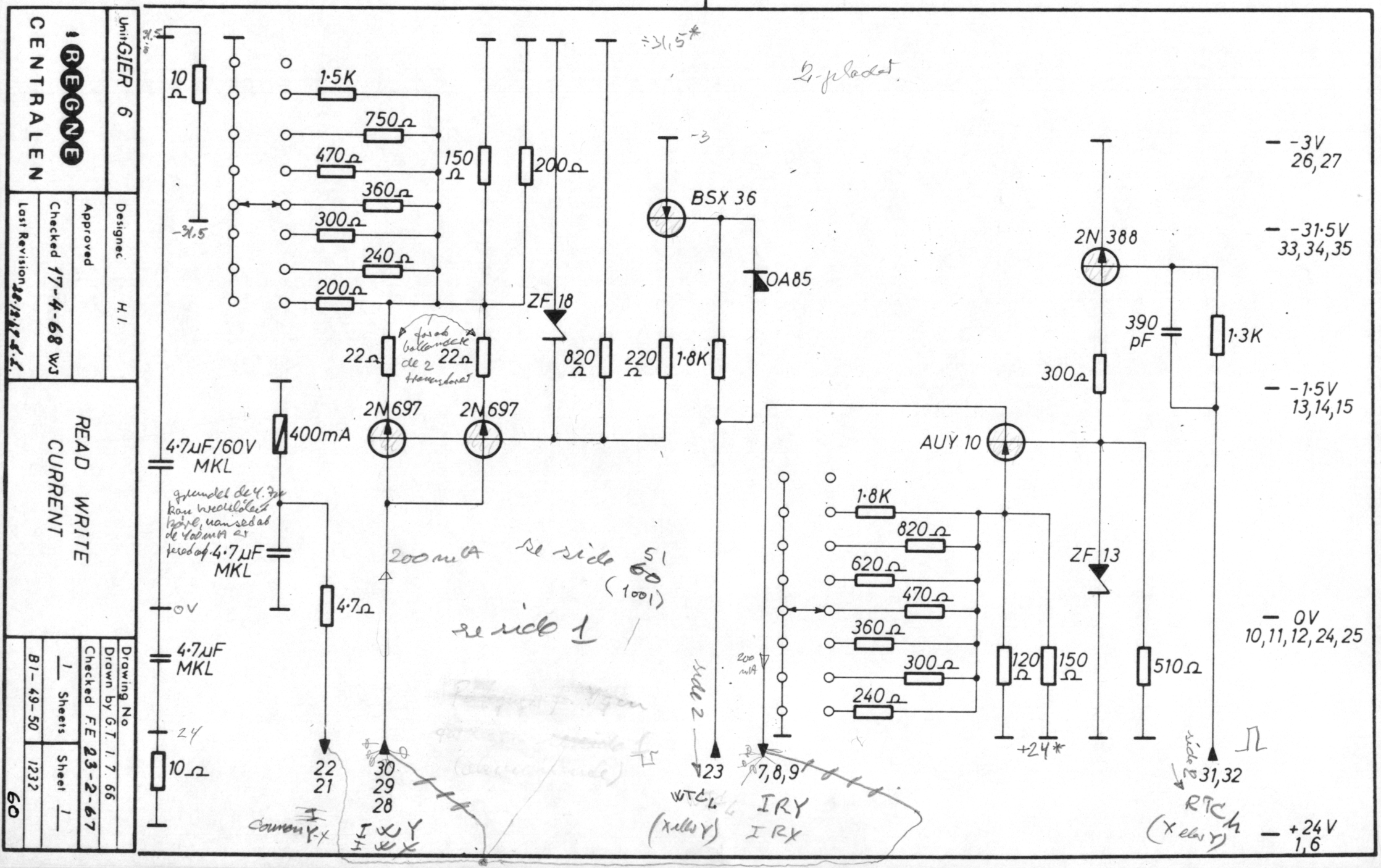

Unit GIER 6
REGNE CENTRALEN
Designed H.I.
Approved
Checked 17-4-68 WJ
Last Revision
READ WRITE CURRENT
Drawing No
Drawn by G.T. 1.7.66
Checked F.E 23-2-67
1 Sheets
Sheet 1
B1-49-50
1232
60
10 Ω
-31,5
1·5K
750 Ω
470 Ω
360 Ω
300 Ω
240 Ω
200 Ω
150 Ω
200 Ω
÷31,5*
2-pladet
-3
BSX 36
OA85
ZF 18
22 Ω
22 Ω
820 Ω
220 Ω
1·8K
2N697
2N697
400mA
4·7µF/60V MKL
4·7µF MKL
4·7Ω
0V
4·7µF MKL
24
10 Ω
200 mA
se side 51 60 (1001)
se side 1
22 21
30 29 28
23
7,8,9
WTC
IRY
IRX
2N 388
390 pF
1·3K
300 Ω
AUY 10
1·8K
820 Ω
620 Ω
470 Ω
360 Ω
300 Ω
240 Ω
ZF 13
120 Ω
150 Ω
510 Ω
+24*
31,32
RTC
-3V 26,27
-31·5V 33,34,35
-1·5V 13,14,15
0V 10,11,12,24,25
+24V 1,6

Unmarked Diodes: OA 95

1) Mounted on Card 0255

2) Mounted on Relays

R correspond with input 0 on Card 0255

M - - - 1 - - -

O - - - 2 - - -

H - - - 3 - - -

L - - - 4 - - -

F - - - 5 - - -

r1 - - - 6 - - -

s1 - - - 7 - - -

r2 - - - 8 - - -

s2 - - - 9 - - -

in - - - 10 - - -

ta - - - 11 - - -

tk - - - 12 - - -

b1 - - - 13 - - -

bs - - - 14 - - -

by - - - 15 - - -

Relay 1-9, mounted in Display Panel beginning with Relay farthest from Hinge on Relayshelf.

Unit: GIER 6	Designed H.I.	Register Selector in KB.	Drawing No
REGNE CENTRALEN	Approved		Drawn by I. 29.4.67
	Checked 1.2.62		Checked F.E. 7-8-67
	Last Revision		2 Sheets / Sheet 2

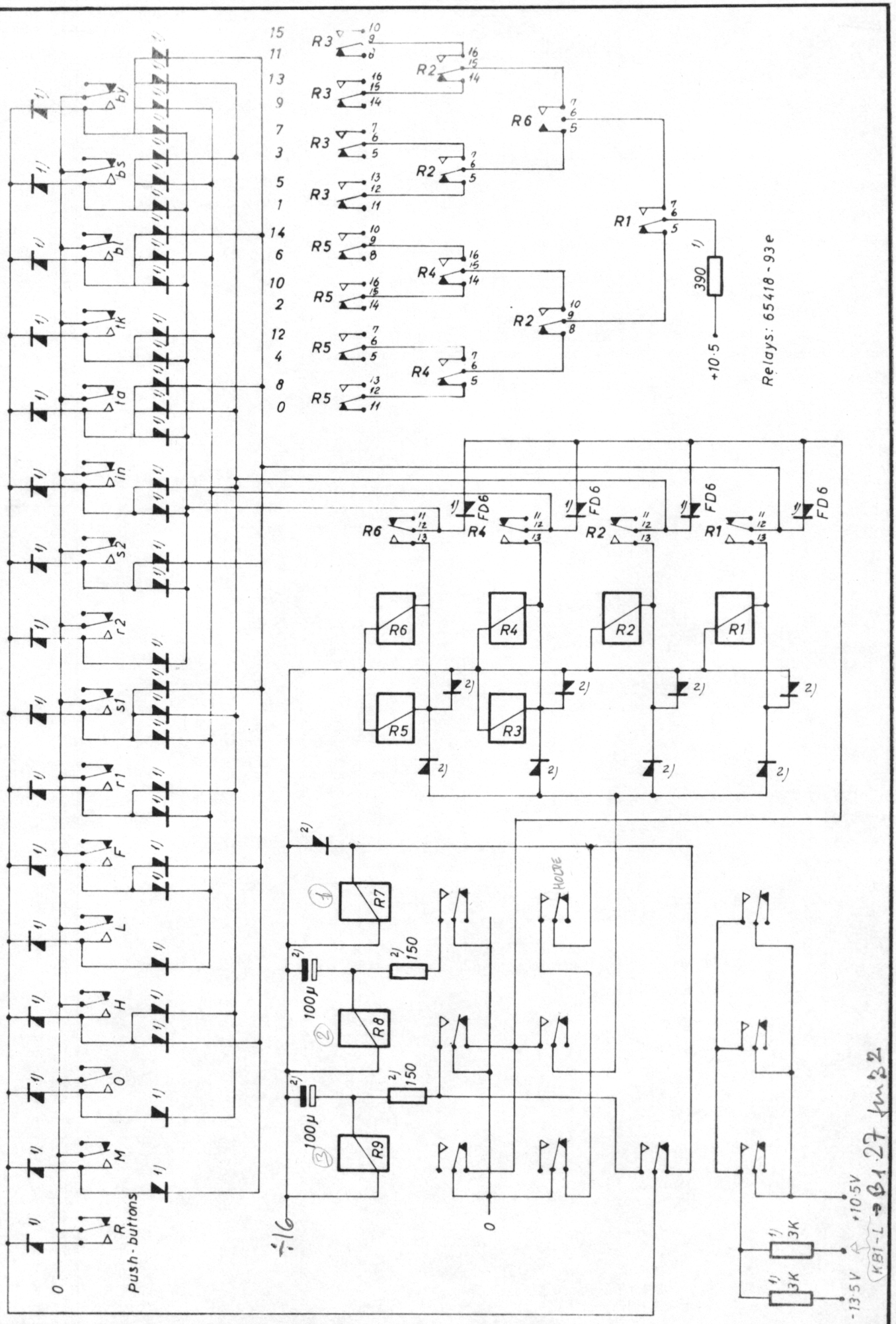

Unit: GIER 6	Designed H.I.	Register - Selector in KB	Drawing No
REGNE CENTRALEN	Approved		Drawn by I.K. 28.4.1967
	Checked 1.2.1962		Checked F.E. 7-8-67
	Last Revision		2 Sheets / Sheet 1

62

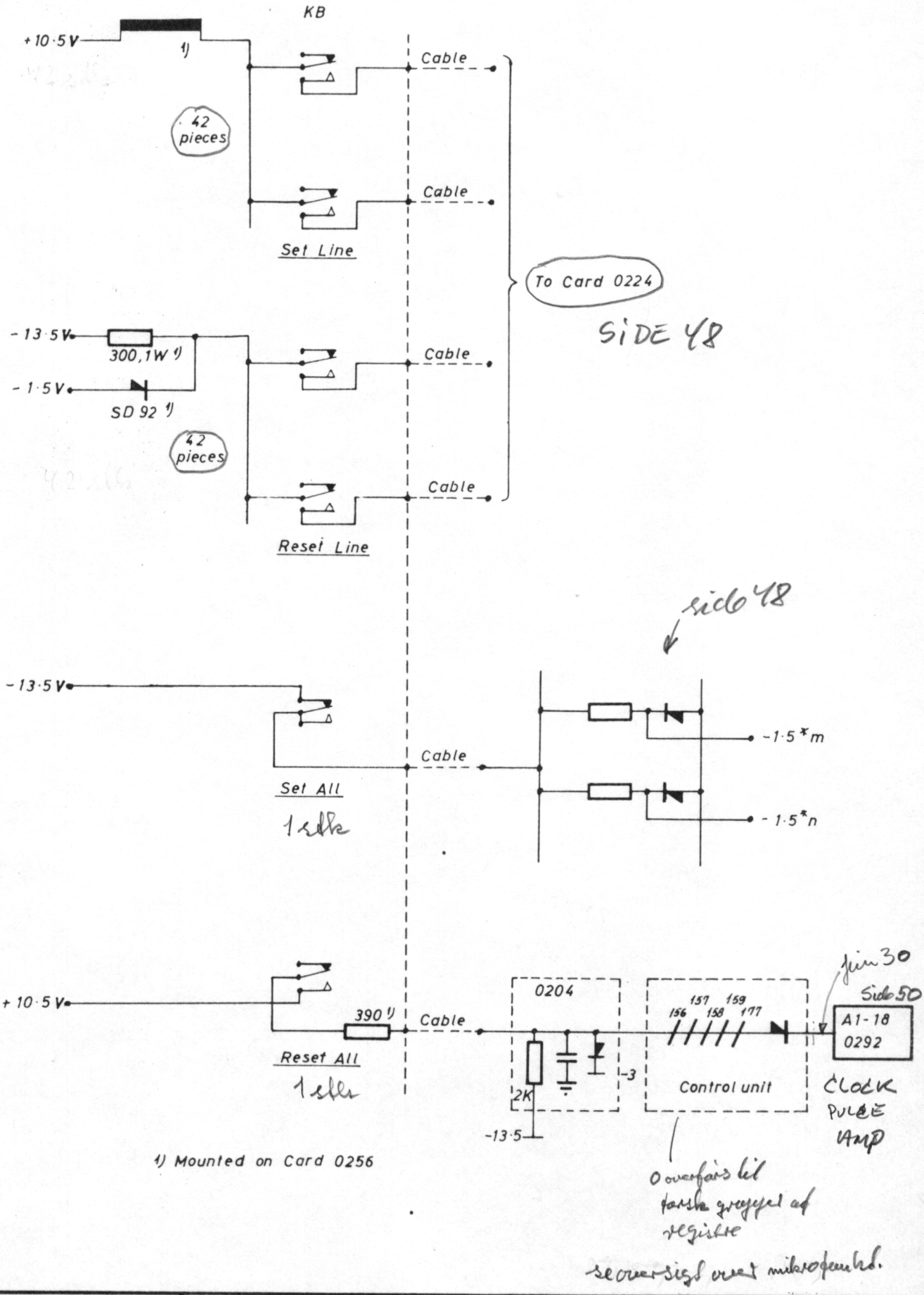

Unit: GIER 6	Designed H.I.	Push-Buttons in KB KONTROLBORD	Drawing No Drawn by I.K. 28.4.1967 Checked F.E. 7-8-67 2 Sheets / Sheet 1
REGNE CENTRALEN	Approved		
	Checked 1.2.1962		
	Last Revision		

KB

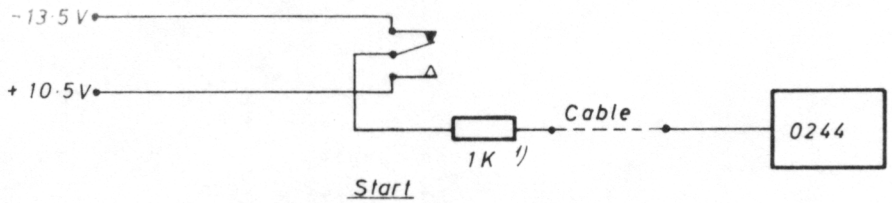

Start

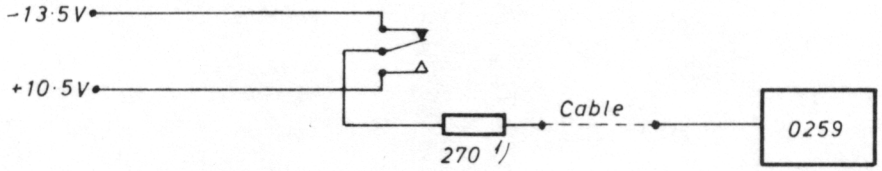

Stop

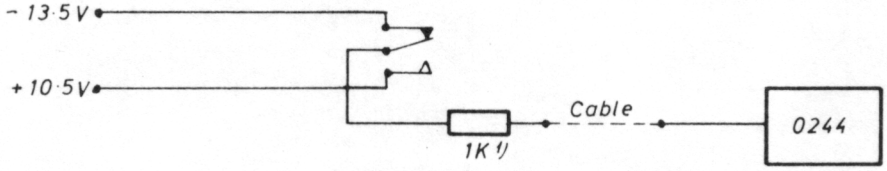

Mikrostart

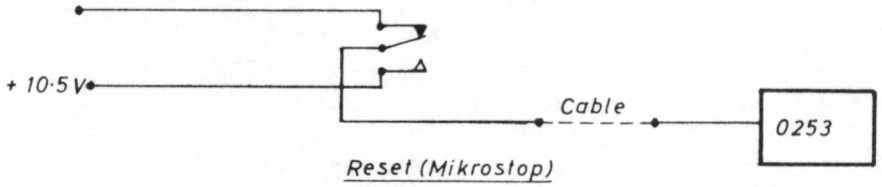

Reset (Mikrostop)

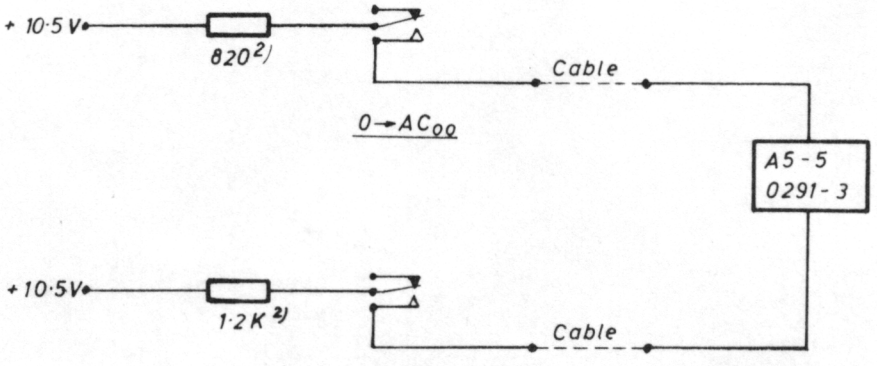

1/ Mounted on Card 256

2/ Mounted on Push-Button

Unit: GIER 6	Designed H. I.	Push-Buttons in KB	Drawing No
REGNECENTRALEN	Approved		Drawn by I. K. 28.4.1967
	Checked 1.2.1962		Checked F.E. 7-8-67
	Last Revision		2 Sheets / Sheet 2

DISPLAY PANEL II

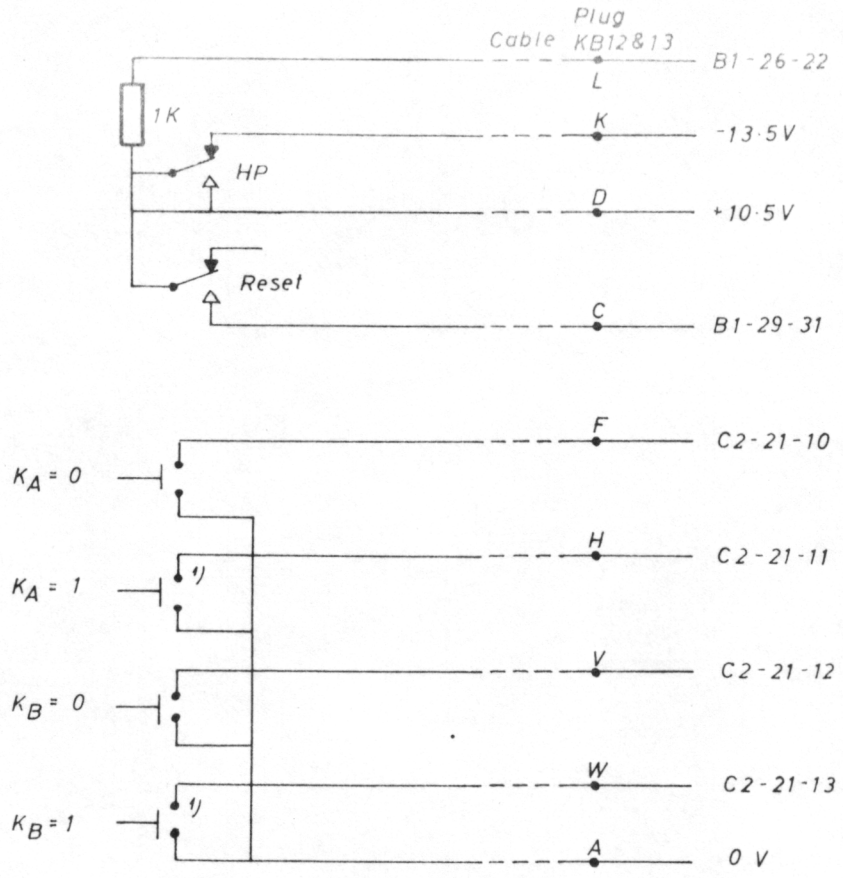

1) Mounted to Lamp.

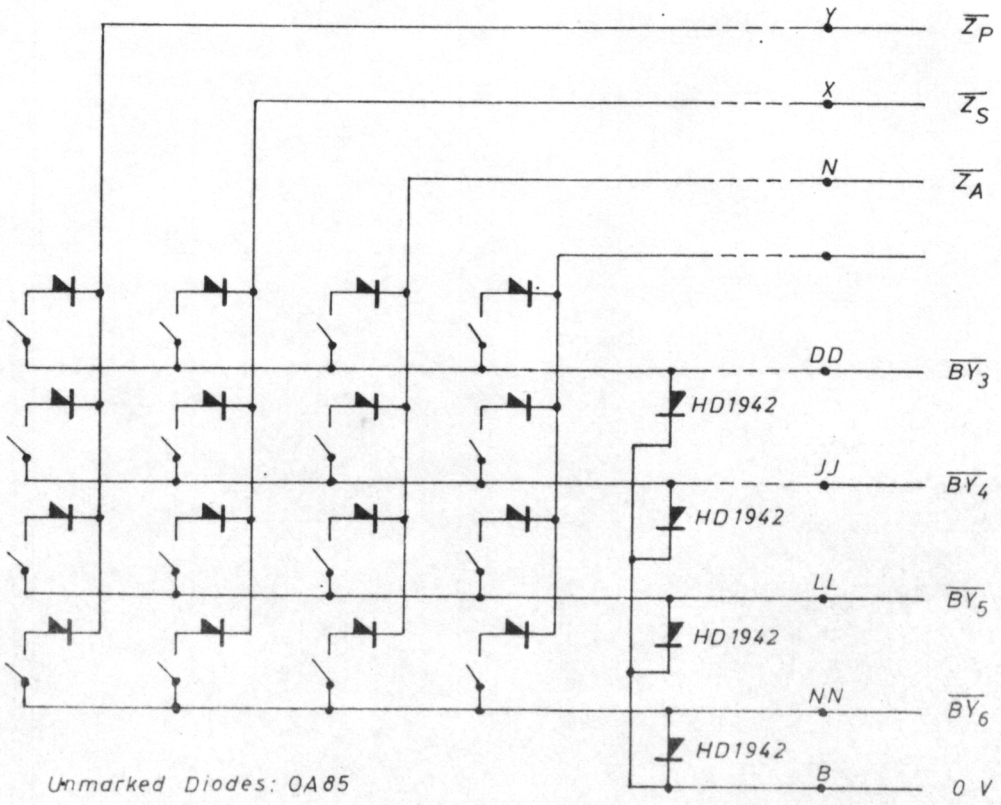

Unmarked Diodes: OA85

Unit: GIER 6	Designed H.I.	Push-Buttons in KBII	Drawing No
A/S REGNE CENTRALEN	Approved		Drawn by I.K. 28.4.1967
	Checked 1.2.1962.		Checked F.E. 7-8-67
	Last Revision		1 Sheets / Sheet 1

Unit: GIER 6 P.S.

REGNE CENTRALEN

Designed H.W.

Approved

Checked 25.10.65.

Last Revision

POWER DIODES

Drawing No

Drawn by B.R. 15.8.66

Checked J.H. 26-2-67

1 Sheets

Sheet 1

7

66

(7)

TB 9

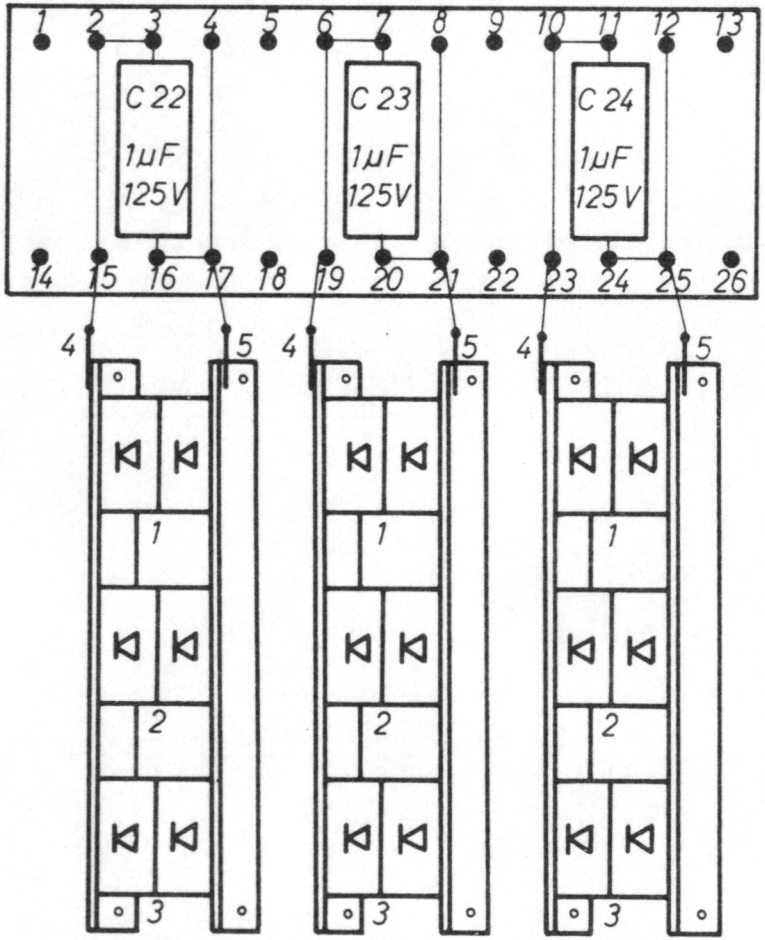

CR1 +24 V

CR 2 +10·5 V

CR 3 -3 V

TB 10

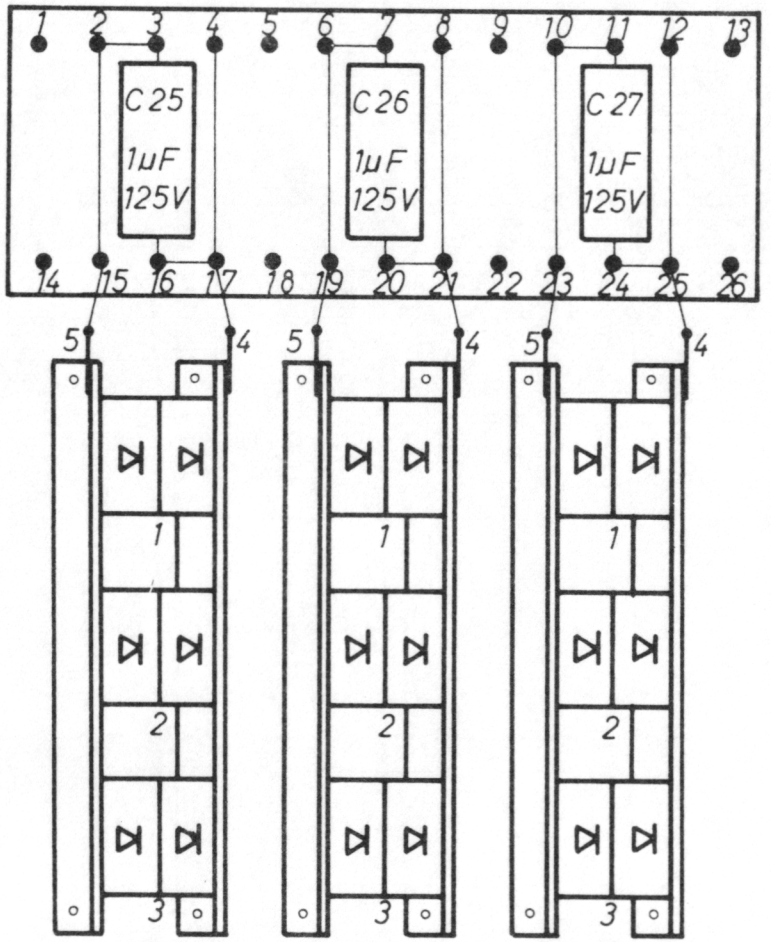

CR 4 -7·5 V

CR 5 -13·5 V

CR 6 -31·5 V

andre spændinger loves ved fra diode 6.

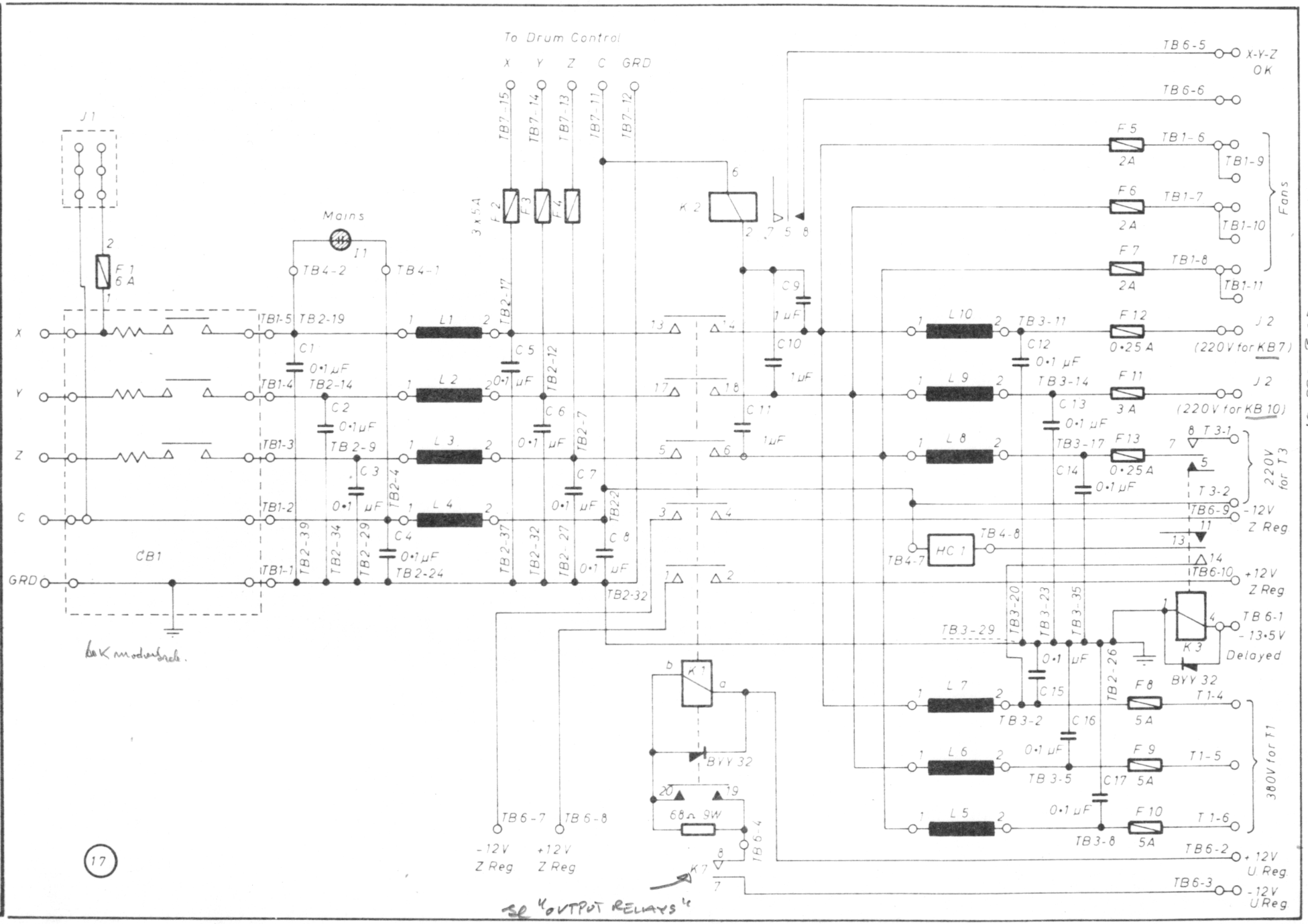

CENTRALEN

REGNE

Unit GIER 6 PS

Designed H.W.

Approved

Checked 25.10.65

Last Revision

MAINS CIRCUIT

Drawing No

Drawn by L.L. 15.6.66

Checked F.E. 26-2-67

Sheets 1

Sheet 1

17

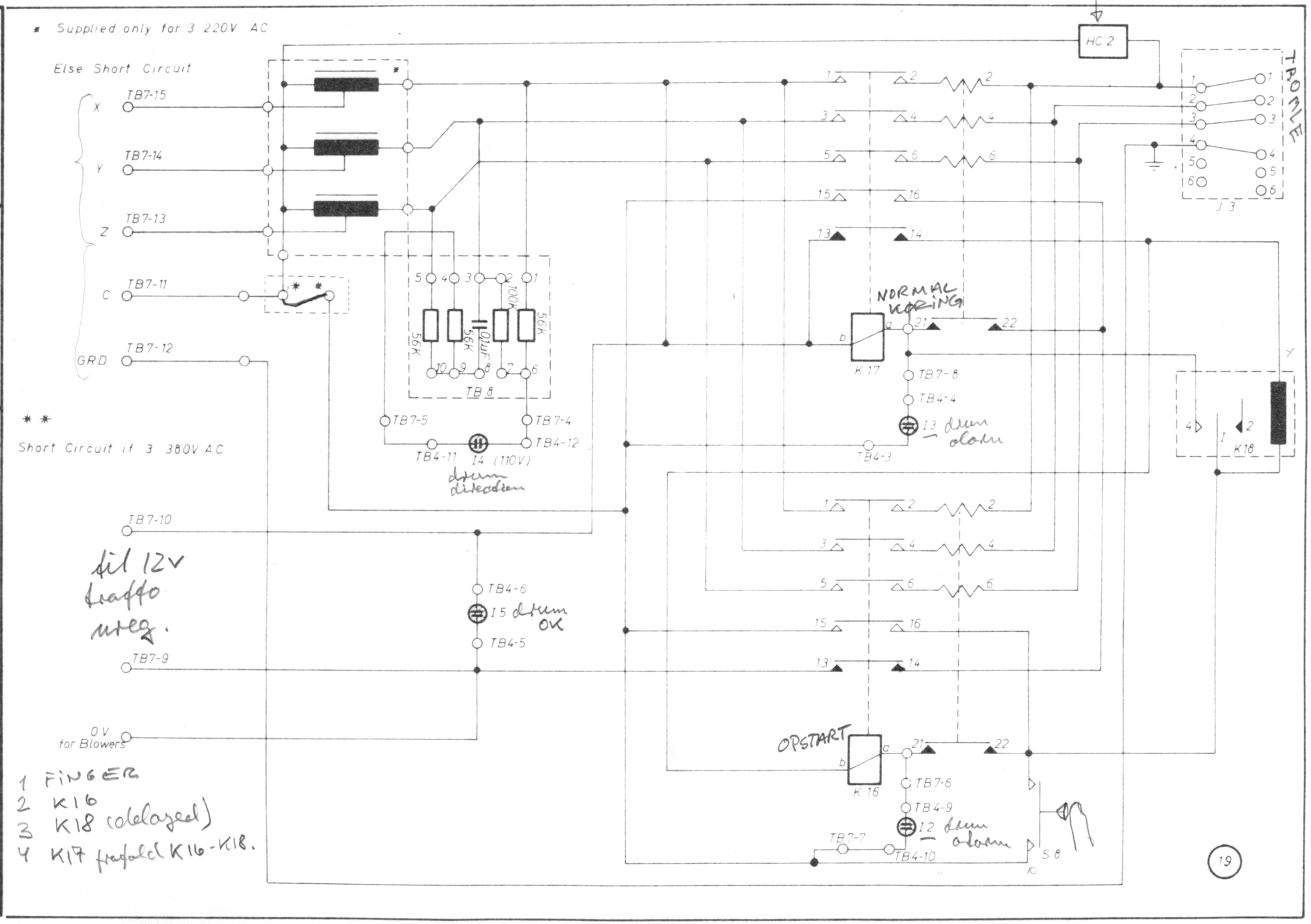

Unit: GIEP 6 PS

REGNE CENTRALEN

Designed H.W.

Approved

Checked 25.10.65

Last Revision

DRUM CONTROL

Drawing No

Drawn by B.R. 9.8.66

Checked F.F. 26-2-67

Sheets 1

Sheet 1

19

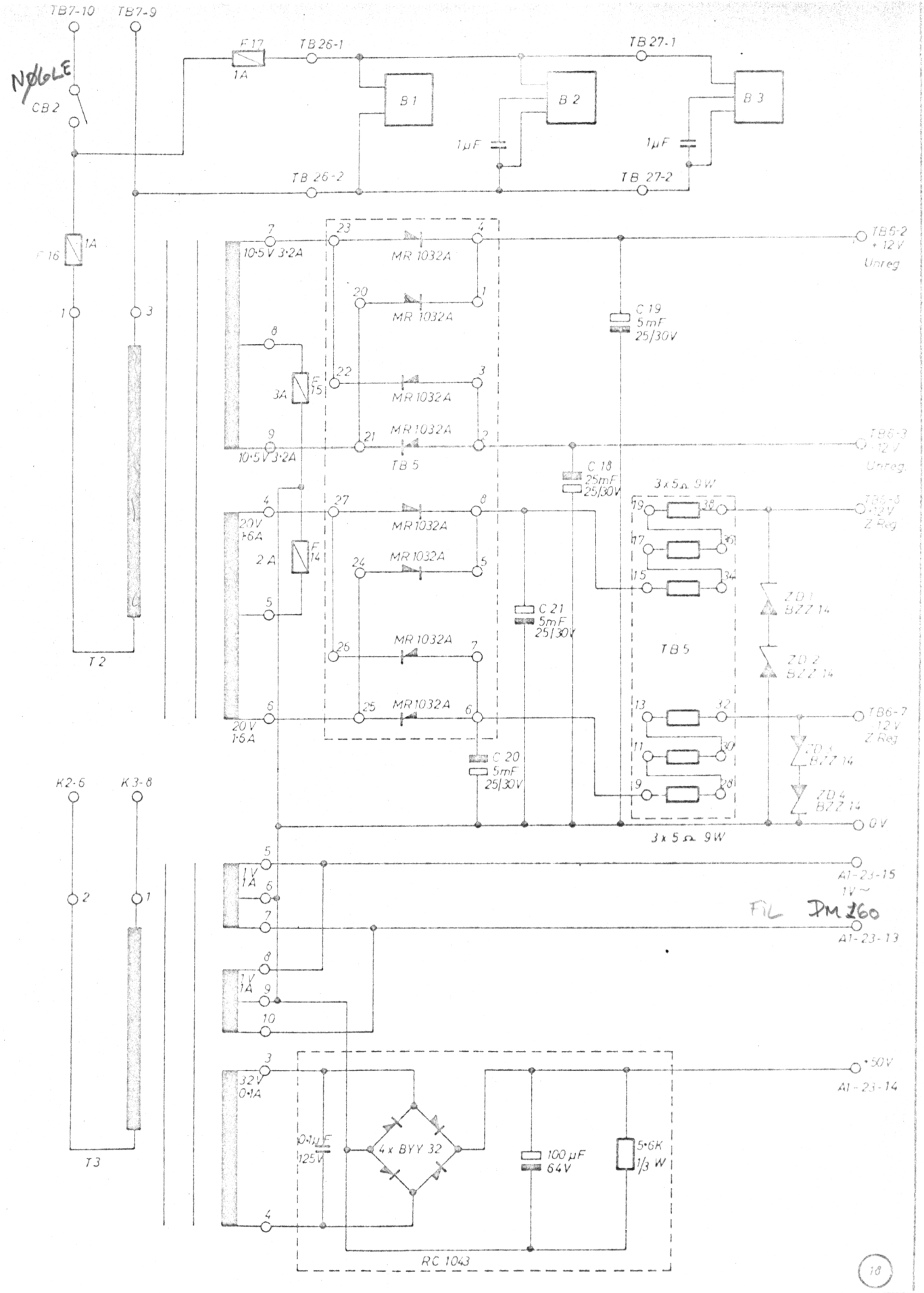

Unit: GIER 6 PS	Designed H.W.	± 12 V CIRCUITS	Drawing No
A/S REGNECENTRALEN	Approved		Drawn by B.R. 10.8.65
	Checked 25.10.65		Checked F.F. 26-2-66
	Last Revision		1 Sheets / Sheet 1

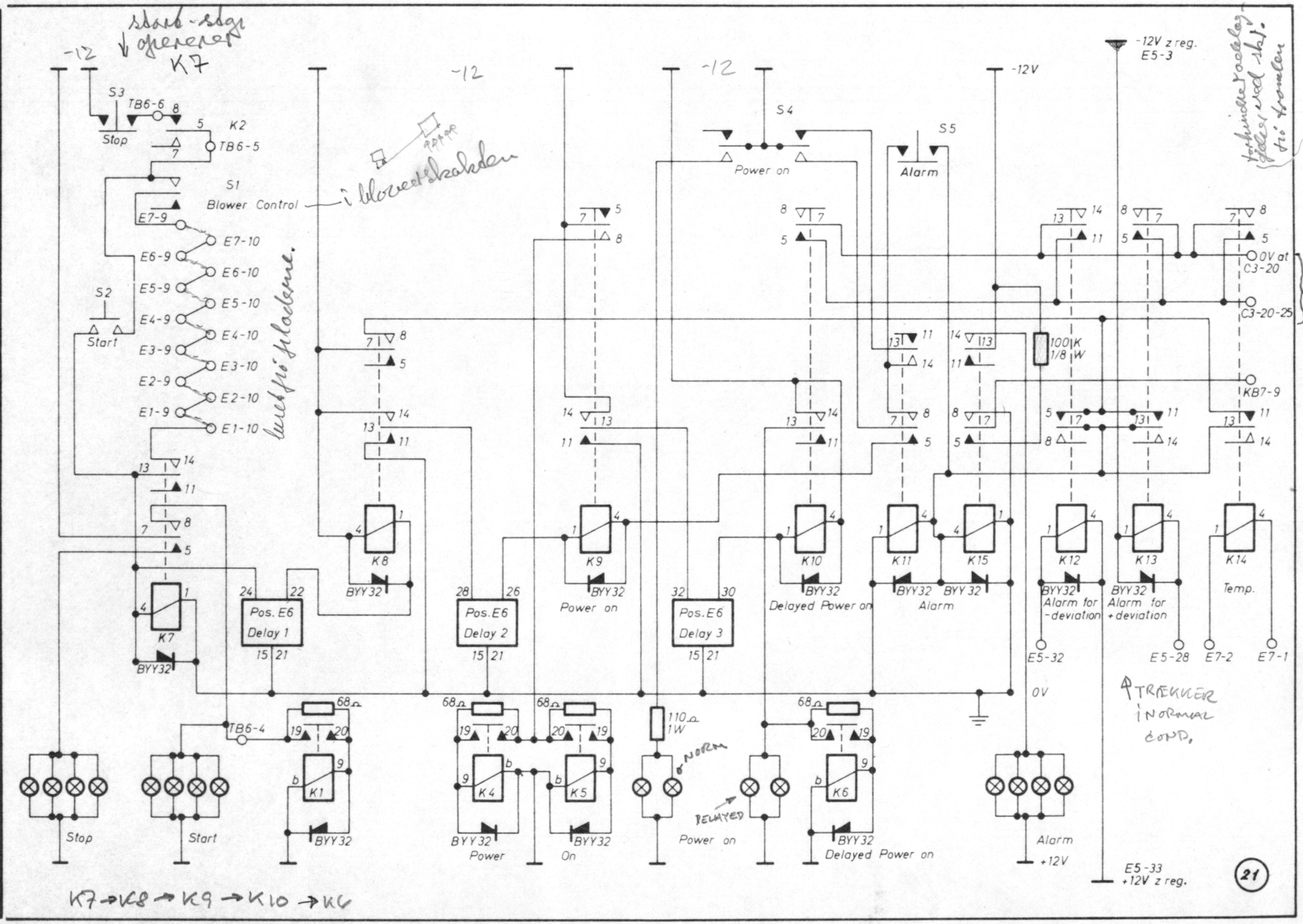

Unit: GIER 6 PS	Designed H.W.		
REGNE CENTRALEN	Approved		
	Checked 25.10.65		
	Last Revision		

OUTPUT RELAYS

Drawing No			
Drawn by E.R. 16.8.66			
Checked F.E. 26-2-67			
1 Sheets	Sheet 1		

21 67

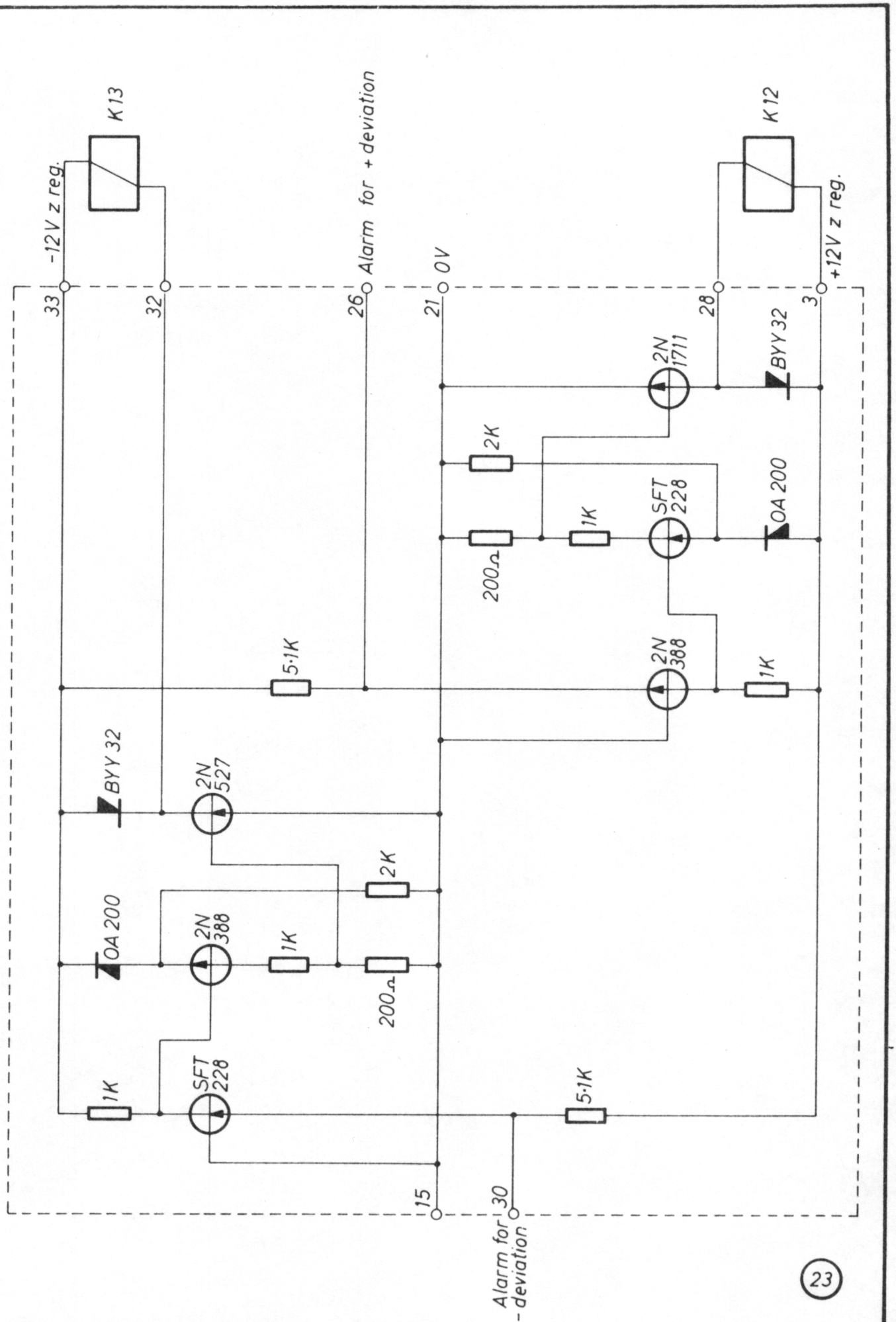

Unit: GIER 6 P.S.	Designed H.W.	ALARM CIRCUIT	Drawing No
REGNE CENTRALEN	Approved		Drawn by G.I 4.8.66.
	Checked 25. 10. 66.		Checked J.H. 26-2-67
	Last Revision		1 Sheets / Sheet 1
			E 5 / 287
			23 / 68

-1.5 laves i gier men stabiliceres i power supply.
(parallelregulering.)

-1.5V

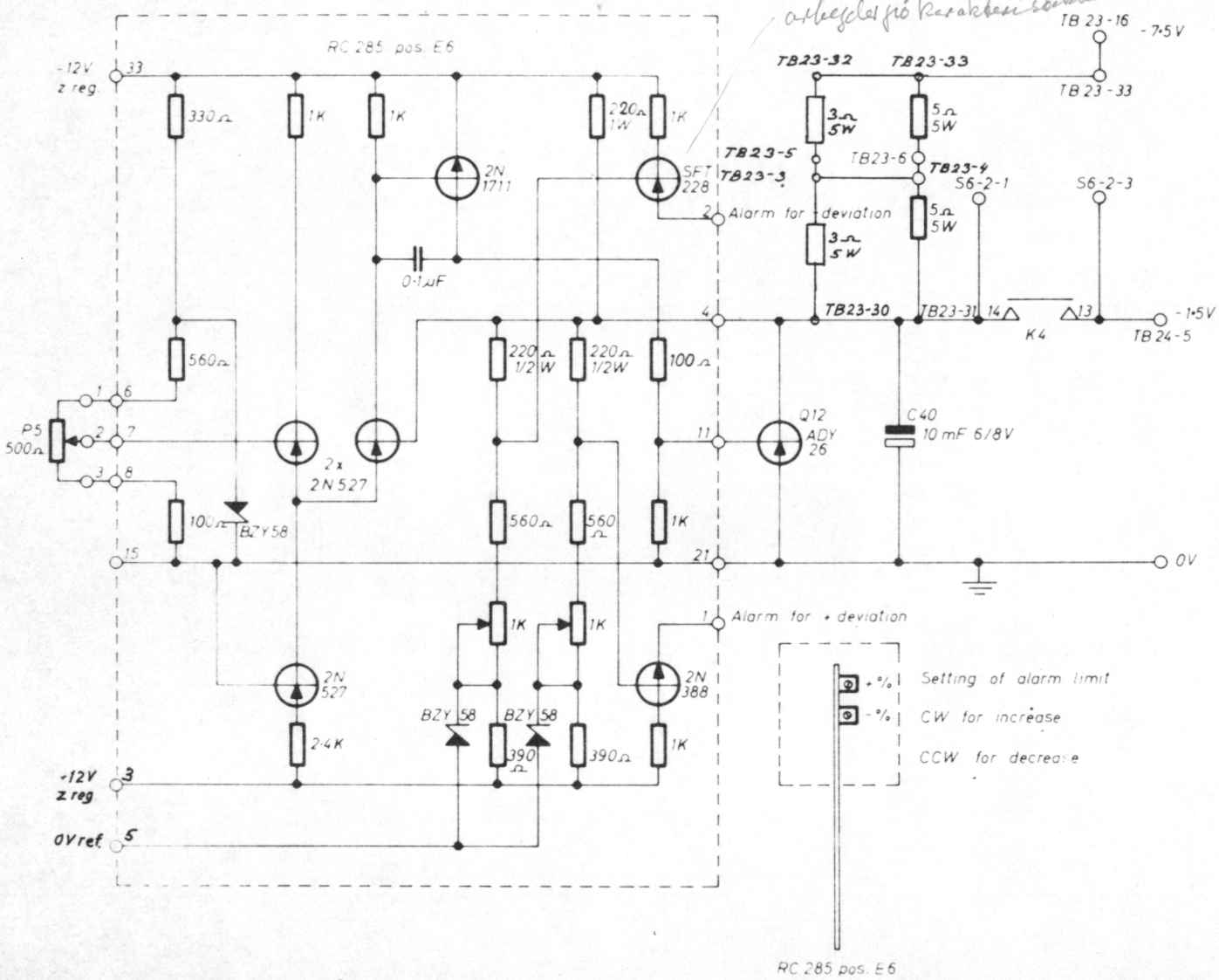

28

Unit: GIER 6 PS

REGNE CENTRALEN

Designed H.W.

Approved

Checked 25.10.65

Last Revision 19.4.68 I.K.

- 1.5 V REGULATOR

Drawing No

Drawn by G.T. 6.8.66

Checked F.E. 26-2-67

1 Sheets

Sheet 1

E 6

285

28

69

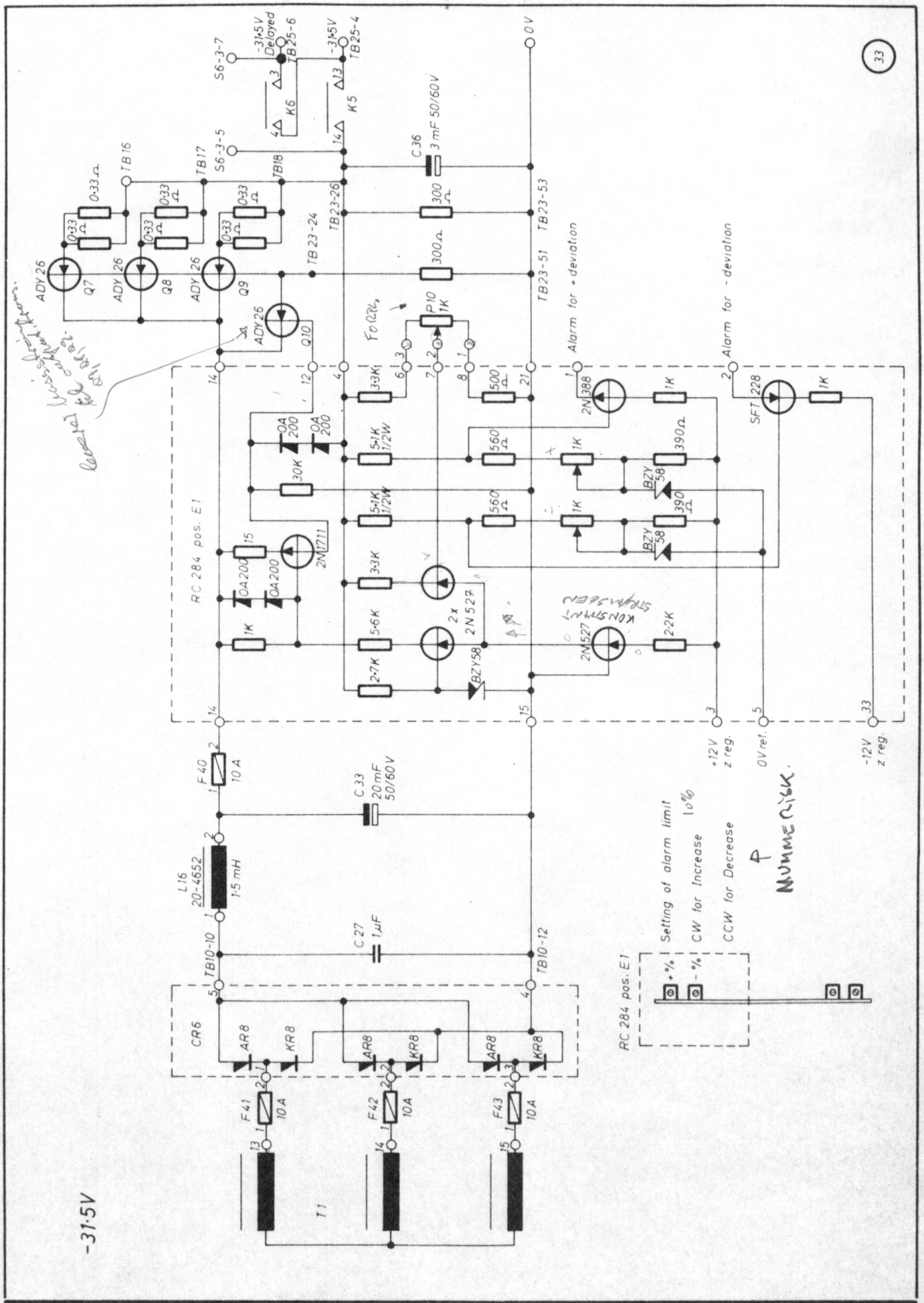

Unit: GIER 6 PS	Designed H.W.	- 31.5 V REGULATOR	Drawing No
REGNE CENTRALEN	Approved		Drawn by G.T. 5.8.66
	Checked 25.10.65		Checked F.E. 26-2-67
	Last Revision		1 Sheets / Sheet 1
			E 1 / 284
			33

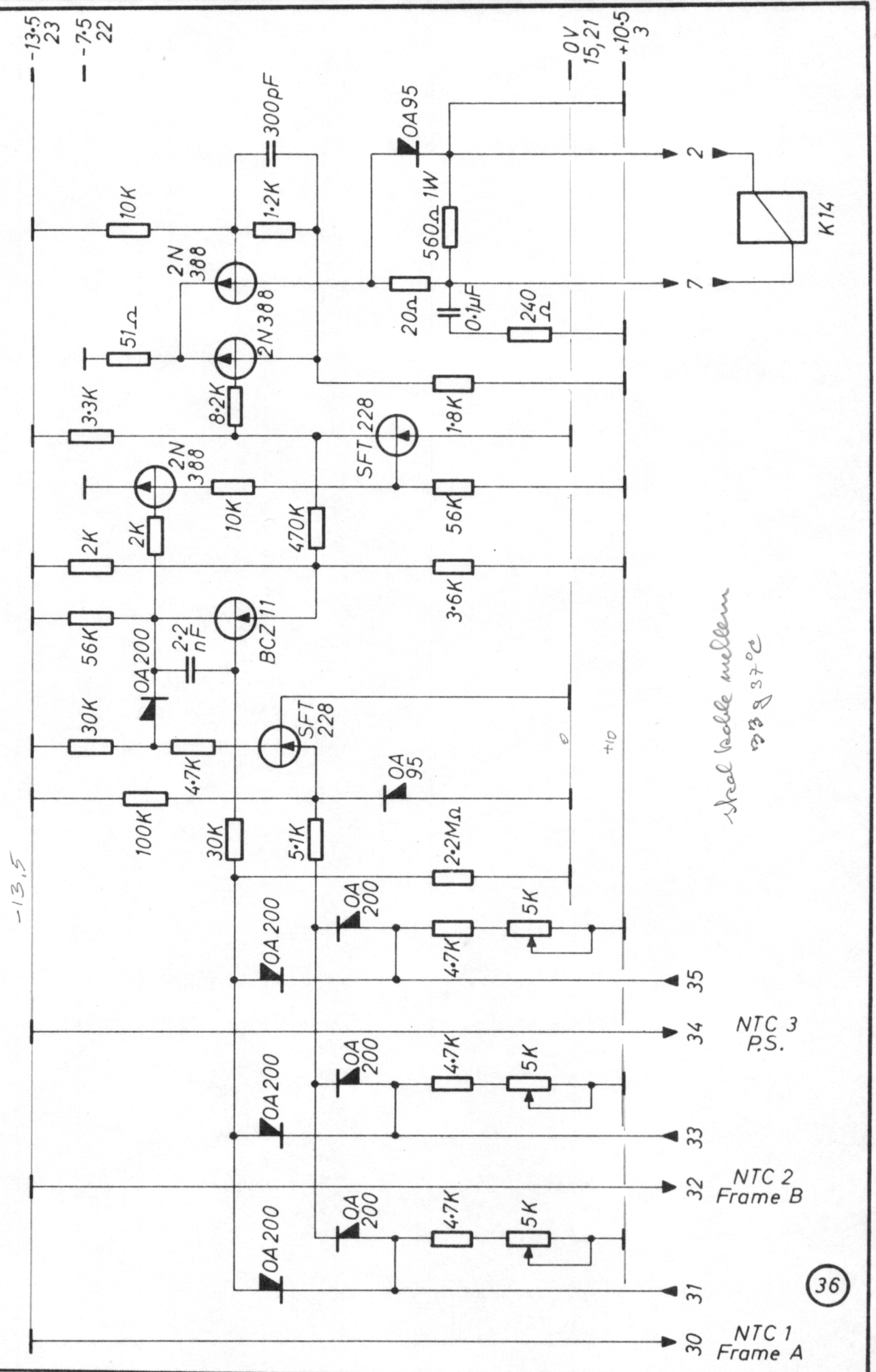

Unit: GIER 6 P.S.	Designed H.W.	TEMPERATURE CONTROL	Drawing No
A/S REGNE CENTRALEN	Approved		Drawn by G.T. 14.9.66.
	Checked 25. 10. 65.		Checked J. H. 26-2-67
	Last Revision		1 Sheets / Sheet 1
			E 7 / 288
			36 / 71

Symbols and Signs

Some twenty-six logical symbols, used in describing the circuits, are explained in the following table. The next seven pages, containing this table, are numbered internally, at the bottom of each page, from 1 to 7.

In order to facilitate a natural association between block diagram and circuit, some of the signal names bear a mnemonic relationship to the logical representation: thus, if a wire carries the logical variable A in low representation, meaning that the most negative level corresponds to logical ' 1 ' (negative logic), this is indicated by A_l in the diagram; similarly, A_h means that the ' 1 ' value of the variable is represented by the high voltage level, i.e. the most positive level (positive logic).

While the block diagrams represent the circuits as accurately as possible, primary emphasis has been placed on making the logical diagrams easy to understand; for this reason then, a circuit element may not necessarily correspond to a logical block or a logical block to a circuit, so that a connection between two inverter outputs, for example, may be described as an OR-gate outside of the dotted box that indicates the limits of the circuit card.

	Symbol	Description
1	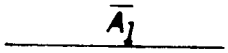	Signalname, here: "A - inverted" in the circuit realized so that logical "1" corresponds to most negative level.
2		Signal path, the arrow shows the direction of the signaltransmission
3		Signal path with fan out.
4		Inverting input. The dot may be used in connection with any in- or output to a symbol
5	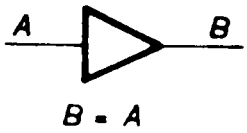	Amplifier or the like with no logical function
6	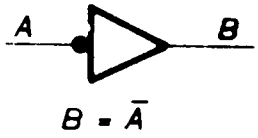	Inverter
7	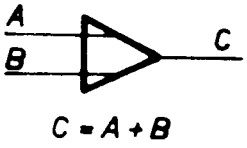	Or - circuit.

Symbol	Description
7a 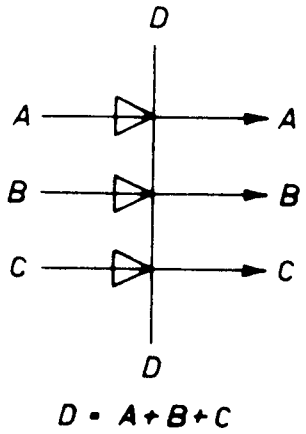 $D = A+B+C$	Or - circuit Specially usefull in large systems f.ex. as encoding circuit
8 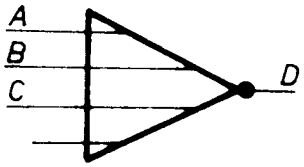 $D = \overline{A+B+C}$	Or - circuit with inverting output. Not controlled input - terminals are considered as not - exsisting
9 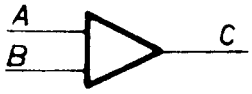 $C = A \cdot B = AB$	And - circuit
9a 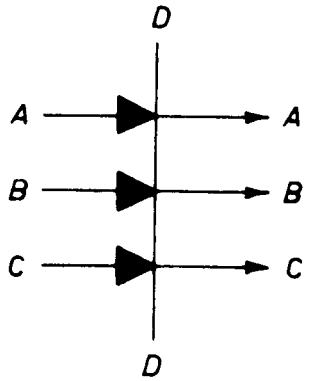 $D = A \cdot B \cdot C$	And - circuit Specially usefull in large systems f.ex as decoding circuit.

Symbol	Description
10 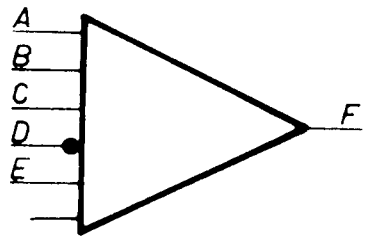 $F = A \cdot B \cdot C \cdot \bar{D} \cdot E = ABC\bar{D}E$	And - circuit with one inverting input. Not controlled input - terminals are considered as not - exsisting
10a 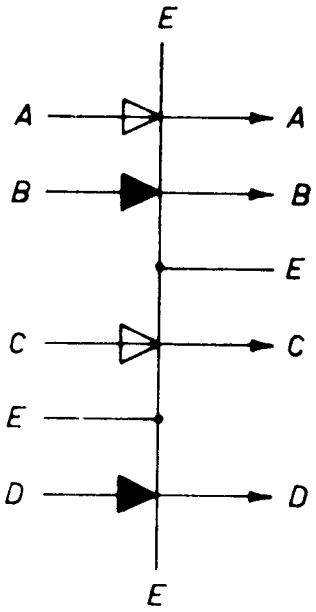 $E = (A + C) \cdot B \cdot D$	Combined and - or - circuit Specially usefull in large systems f.ax. as busline circuit
11 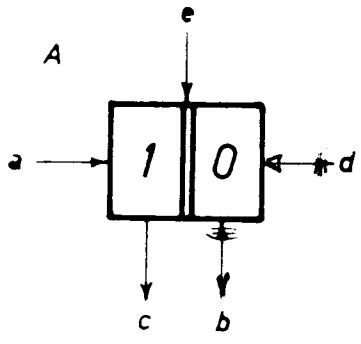 	Flip - flop, 1-bit store for the variable A. Input - signals that are "0" do not influence the flip-flop. If an input to the "1" - side (a) becomes logical "1", then the variable A will be set to "1". If an input to the "0" - side (b) becomes "1", then the variable $\bar{A}$ is set "1", which means that A becomes a "0". Output-signals from the "1" - side (c) are equal to A, and from the "0" - side (d) equal to $\bar{A}$. Shift of the inputsignal upon terminal e from "0" to "1" will change the value of A from "1" to "0" or from "0" to "1".

Symbol	Description
12 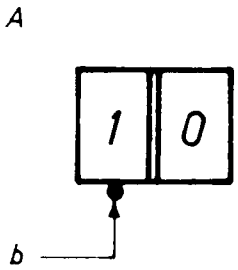	Flip - flop with inverting input.
13 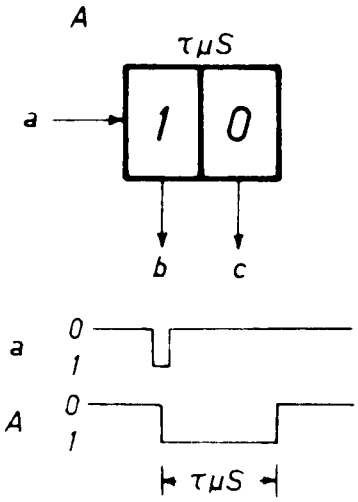	Monostable multivibrator, 1-bit store for the variable A. Statically A is "0". If an input to the "1" - side (a) becomes "1" for a short time, then the variable A is set to "1" and stays "1" for a limited time. The time may be noted at the figure. Outputsignals from the "1" - side (b) are equal to A, and from the "0" - side (c) equal to $\overline{A}$.
14 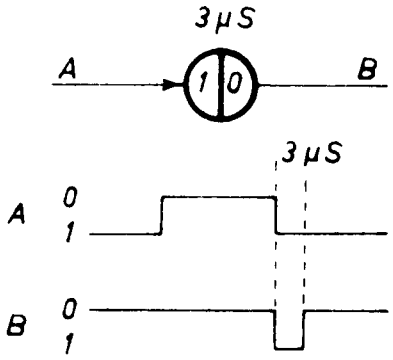	Circuit for differentiation. Input indicated by means of an arrow. Outputsignal is statically equal to the value noted in the output side, in this case "0". At the input side is the inverse value noted, here "1". When the input changes its value to the one noted at the input then the output signal becomes equal to the inputsignal for a limited time. The time may be noted next to the symbol

Symbol	Description
15 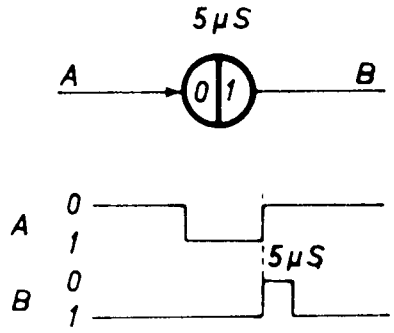	Circuit for differentiation as above. The output signal is statically a "1". When the inputsignal changes from "1" to "0" the outputsignal will become a "0" for a limited time.
16 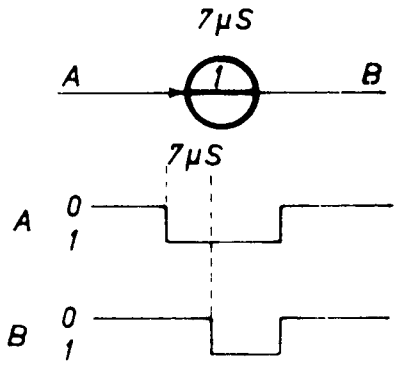	Circuit for delaying signals. Inputside indicated by means of an arrow. Outputsignal is statically equal to the inputsignal. When the inputsignal changes from "0" to "1" then the outputsignal will remain "0" for a limited time, that is to say the value indicated in the circle (here "1") is delayed. A charge of the inputsignal from "1" to "0" is transferred to the output without delay.
17 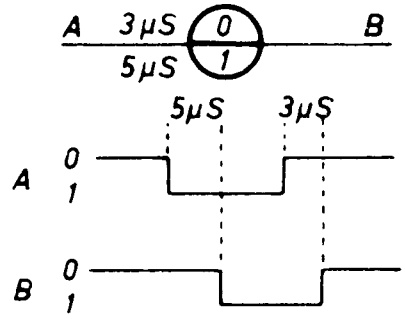	Circuit for delaying signals as above. Both "0" and "1" are delayed by an amount of time as indicated next to the "0" - and "1" - side respectively
18 	Oscillator
19 	Oscillator generating square - waves

Symbol	Description
(20) 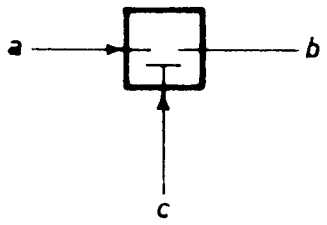	Switch circuit with in - and out-put terminals a and b and control - input c. When the signal to the control-input c is "1" then the outputsignal b will be identical to the inputsignal. When the signal to the controlinput c is "0" the signalpath from a to b is broken, that is outputwire b is not controlled. The input to which the wire b is connected should in this case be considered as not - existing compare symbols 8 and 10.
(21) 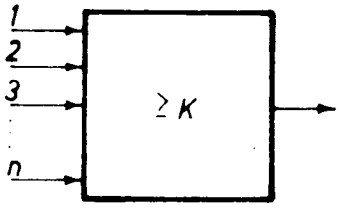	Majority circuit. The output is "1" if and only if at least K of the inputsignals are "1".
22 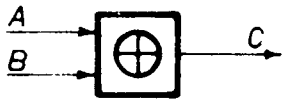 $C = A \oplus B = A \cdot \bar{B} + \bar{A} \cdot B$	Half - adder modulo 2. (exclusive or)
23 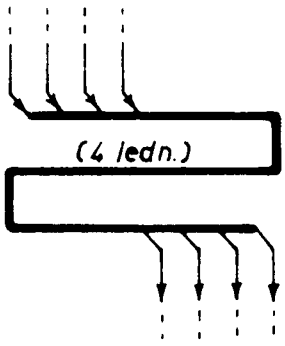	Fan - in and fan - out of signal - paths.

Symbol	Description
24 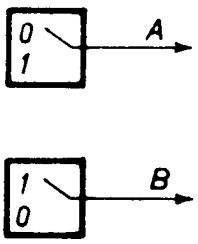	Mechanically activated functions, f.ex. push-buttons, with only one stable position. Outputsignal A is "0" in the stable position and "1" in the activated position. Outputsignal B is "1" in the stable position and "0" in the activated position.
25 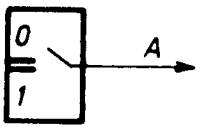	Mechanically activated function, f.ex. toggle switch, with two stable positions. Outputsignal A is "0" or "1" depending upon the state of the switch
26 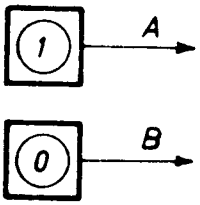	Signal sources for steady signals. Outputsignal A is always "1" Outputsignal B is always "0"

HELP-Routines in GIER

Regnecentralen, October 1964

Help-routines activated from typewriter or tape:

h <**hp-name**>
<**Parameters**>
e

Help-routines activated from the program:

— — —
HS 1
h <**hp-name**>/
<**number of parametercells**>
<**Parameters**>
— — —

Comment to the diagram:

1) In most cases *omission* of a parameter in an address or increment implies that the parameter is set equal to zero.
   An exception is specification of drum track, where omission is interpreted as reference either to the Core store or to track 268 (gem, hent and sam).

2) <**name of register**> is written as a basic operation:
   R-reg. as **gr**
   M-reg. - **gm**
   RF-reg. - **grf**
   s-reg. - **gs**
   p-reg. - **gp**
   Indicator and overflow register as **gi**
   tk-reg. - **gk**
   by-reg. - **sy**
   All registers and exit cell as **ar**
   All registers and exit cell, with R and M taken as RF: **arf.**

3) Dotted lines separate different formats or different parts of the *same* parameter. Full lines separate different parameters.

4) New help-routines are inserted as follows:
   Tape with hp-routine is read by typing:
   c <**first track**>
   l

C. G. og P. M.

Function	Name	Parameters		
		Effect	Format	Remarks
Initialization: HSF 2 in store, Reset hp-list, control of checksums of HELP	**h start**	Error messages only	**0**	Without parameter: Print out the hp-list and the errors. With 1 parameter: Error messages only.
Check: Control of checksums of HELP	**h kontrol**	Error messages only	**0**	Same as for **h** start.
Output: Print-out of store or registers with selected format	**h tryk**	Punch/typewr.: <p> =4/5 <n> numbers per line <baseadr> =startadr. for drumblock in C.st. No typing of location: <s> =s, otherwise empty	**bt** <**s**> + <**n**>**.39+1.** <**p**> **t** <**baseadr**>	No parameter ⇒ typewr.; 3 numbers per line; baseadr.=0; locations typed for each line.
		Multiply by $2^{p2} \cdot 10^{p10}$ b significant digits h digits in front of dec. point; d decimals n=1/0: Zero/empty in front of dec. point Sign of mantissa, exponent: f1, f2=0/1/2/3: sign empty/−/±/± bE digits in exponent g1-g5: Number of digits in digitgroups	**nt** <**p2**>**t**<**p10**> **qq b.3+h.7+d.13+n.14+f1.9+f2.19** **+bE.17+g1.23+g2.27+ . . . +g5.39**	Acts only on following **gin, gmn** and **grn.** The parameter occupies 2 words and must start with **nt.**
		Instruction (also with absolute adr.) Integer (with spec. layout) Fix.p.number 6 dec. (or 12 dec. or spec. layout) Float.p.number 5 dig. (or 10 dig. or spec. layout) Group of 4 integers per cell	**gp** (or **gpr**) **gi** (or **gin**) **gm** (or **gmp** or **gmn**) **gr** (or **grp** or **grn**) **ga**	Each of the operations above the dotted line may go together with each type below the line. No left operation ⇒ last used outputformat still valid. No parameter at all ⇒ No output.
		Exit address or contents of exit cell Register Cell a to b Cell a to b on track c	**,ga** or **,cl** **,**<**name of register**> <**a**>**t**<**b**> <**c**>**.39+** <**a**>**t**<**b**>	
Dump: Condensed storage dump	**h kompud**	Tape without definition of storage location	**3c**	Only as first parameter.
		Cell a to b (<mark> see below)	<**a**>/ /<**b**> <**mark**>	No parameter ⇒ No output, unless the par. **1c** or **2c** is used (see below).
		Cell a, track c1 to cell b, track c2 HSF2→HSF2: <mark> = empty HSF2 untouched: <mark> = a HSF2 to all cells: <mark> = b	<**c1**>/<**a**>/<**c2**>/<**b**> <**mark**>	
		All Cores (no. 0-1023) and registers All tracks (no. 58-319) End with **u** <adr> - - **s** - - **e** <adr>	**1c** **2c** <**adr**>/ /**100**/ **c** **10**/ **c** <**adr**>/ **1**/ **c**	The last 3 types can be combined mutually, and can be combined with each of the first 2 types.
Correction: Input to register	**h ret**	Number/instruction→R or M Float.p. number →RF Integer/adr.constant→other registers	<**name of register**> <**instruction(s) or number**>	The parameter occupies 2 words. Only input to 1 register is possible.
		Spec: Number with overflow→R	**gr 11** <**number**>	
Store-on-Drum: Storage of Cores and registers on drum	**h gem**	Core store and registers→track c to c+25	**sk** <**c**>	No parameter ⇒ Cores→track 268-293.
Resetting: Displacement of drumsection to drum or Cores	**h hent**	26 tracks from no. c1,... → no. c2,...	**sk** <**c1**>**t**<**c2**>	c1=0 ⇔ c1=268 c2=0 ⇔ c2=294 No par. ⇒ track 268-293→Cores.
		n tracks from no. c1,... → no. c2,...	**sk** <**n**>**.39+** <**c1**> **t**<**c2**>	
Comparison: Output, with chosen format, of deviations between two drum sections	**h sam**	Comparison of 26 tracks no. c1,... with 26 tracks no. c2,...	**sk** <**c1**>**t**<**c2**>	c1=0 ⇔ c1=294 c2=0 ⇔ c2=268 No par. ⇒ Cores compared with track 268-293.
		Specification of output (format and store-sections) as for **h** tryk	The same as for **h** tryk	No parameter ⇒ No output.
Patch Insertion: Insertion of hp-routine in running program	**h hp ind**	Information stored on track d; cell a,...	**qq** <**a**>**.29+** <**d**>	No **a, d** ⇒ Inform. stored on track 58,... No **b, c** ⇒ Insertion in Core store block.
		Insertion in drumblock beginning on track c with base address=b	**qq** **t**<**b**>**.29+** <**c**>	
		hp-routine activated at $(n+1)^{st}$ and following executions of order in cell h	**h** <**hp-name**>/<**n**>**.29** +<**h**> <**Parameters for chosen routine**>	Only 1 hp-routine can be chosen.
Patch Removal: Removal of hp-routine inserted by means of **h** hp ind	**h hp ud**	Remove hp-routine from cell h	**qq**<**h**>	No **b, c** ⇒ hp-routine removed from Core store block.
		Removal from drumblock beginning on track c with baseadress=b	**qq** **t**<**b**>**.29+** <**c**>	
Tracer: Output for all jumps performed by running program	**h hop**	h hop stored in cell A to A+113 in Cores Punch/typewr.: <p> =4/5	**bt** <**A**> **t 1.**<**p**>	No increment ⇒ typewriter **A** *must* be specified.
		Traces only from cell a to b	**qq** <**a**> **t** <**b**>	No par. ⇒ Whole core store is traced.
		Finish control, continue running	Change KA, press HP-button, type **e**	

FR. BAGGES KGL. HOFBOGTRYKKERI. KBHVN.

GIER
SYSTEM

OLD

HELP-Routines in GIER

A/S REGNECENTRALEN SALES DIVISION: 2 SMALLEGADE - COPENHAGEN F
TELEPHONE: (01) FA 9916